GEARTEK®

HYDRAULIC GEAR PUMPS AND MOTORS

# 'MD/RD' Series

## SINGLE MOTOR
## SINGLE REVERSIBLE PUMP

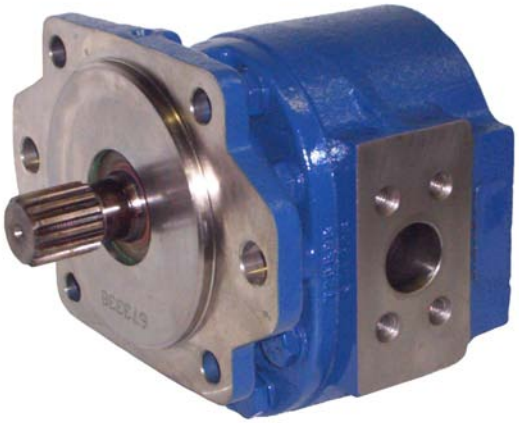

## Performance Data

| MODEL SIZE | DISPLACEMENT/REVOLUTION (THEORETICAL) | | | | PUMPS | MOTORS | | | |
|---|---|---|---|---|---|---|---|---|---|
| | U.S. GALLONS | CUBIC INCHES | CUBIC CENT. | MAX. RPM | MAX. PRESSURE PSI | IN-LB TORQUE @ 2500 PSI START | IN-LB TORQUE @ 2500 PSI RUN | HP @ 2500 RPM 2500 PSI | MAX. PRESSURE PSI |
| 15 | .0129 | 2.98 | 48.8 | 2500 | 2500 | 680 | 1050 | 38 | 2500 |
| 20 | .0172 | 3.97 | 65.1 | 2500 | 2500 | 960 | 1430 | 50 | 2500 |
| 25 | .0215 | 4.97 | 81.4 | 2500 | 2500 | 1240 | 1810 | 64 | 2500 |
| 30 | .0258 | 5.96 | 97.6 | 2500 | 2500 | 1520 | 2181 | 74 | 2500 |
| 35 | .0301 | 6.95 | 113.9 | 2500 | 2500 | 1800 | 2561 | 90 | 2500 |
| 40 | .0344 | 7.95 | 130.2 | 2500 | 2500 | 2050 | 2940 | 105 | 2500 |
| 45 | .0387 | 8.94 | 146.5 | 2500 | 2500 | 2350 | 3320 | 124 | 2500 |

* CONSULT FACTORY WITH TYPE APPLICATION
PRESSURES MAY BE LIMITED TO SHAFT TYPE

- CAST IRON THROUGHOUT
- PRESSURES TO 4000 PSI
- FLOWS TO 97 GPM
- HEAVY DUTY SLEEVE TYPE BEARINGS
- DOUBLE VITON® SHAFT SEALS STANDARD
- PRESSURE COMPENSATED THRUST PLATES
- DESIGNED FOR HEAVY DUTY APPLICATIONS
- SINGLE AND MULTI-STAGE CONFIGURATIONS
- VARIOUS SHAFT, FLANGE AND PORT OPTIONS
- PRECISION GEARS MACHINED FROM SOLID BAR STOCK
- COMPATIBLE WITH MOST FIRE RESISTANT FLUIDS
- CONTAMINANT RESISTANT
- COMPUTER DESIGNED AND MANUFACTURED
- QUALITY CERTIFIED
- FLEXIBLE DESIGN FOR NEW OR OEM REPLACEMENTS
- SERVICE SUPPORTED BY DEDICATION AND INVENTORY

P. O. BOX 2160, 1506 FULTON DR.
CORINTH, MISSISSIPPI 38835

Phone: 662/286-2252 Fax: 662/287-6580 E-mail: haisales@geartek.com Http: www.geartek.com

## SHAFTS AVAILABLE

### 1 — 1 1/4"-14 TOOTH SPLINE

**SPLINE DATE**

| | |
|---|---|
| DIAMETRAL PITCH | 12/24 |
| PRESSURE ANGLE | 30° |
| NO. OF TEETH | 14 |
| MINOR DIA. | 1.062-1.050 |

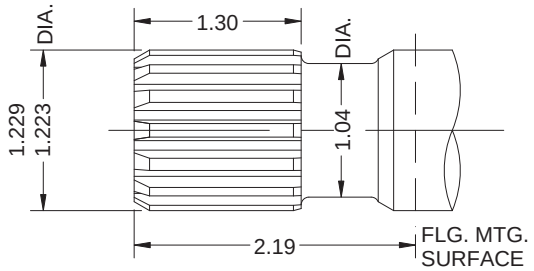


### 2 — 1" STRAIGHT

**AVAILABLE ON 15 THRU 35 SIZES**
**TORQUE LIMIT 341 FT.-LBS.**

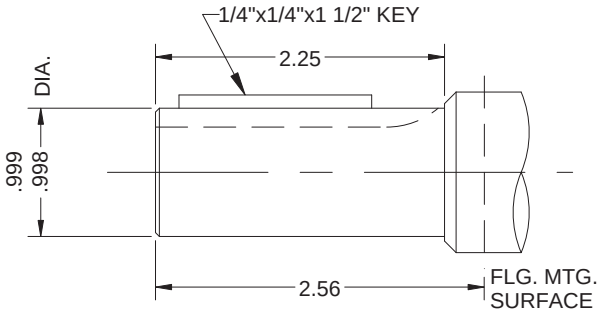


### 3 — 1 1/4" STRAIGHT

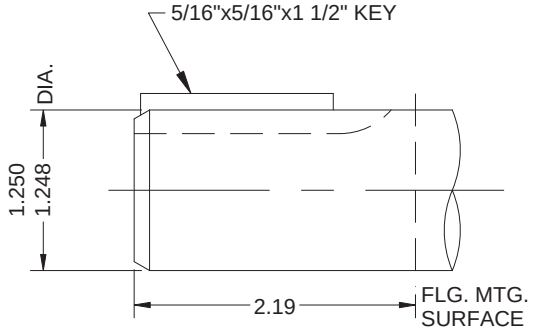


### 4 — 7/8"-13 TOOTH SPLINE

**AVAILABLE ON 15 THRU 35 SIZES**
**TORQUE LIMIT 184 FT.-LBS.**

**SPLINE DATE**

| | |
|---|---|
| DIAMETRAL PITCH | 16/32 |
| PRESSURE ANGLE | 30° |
| NO. OF TEETH | 13 |
| MINOR DIA. | .733-.722 |

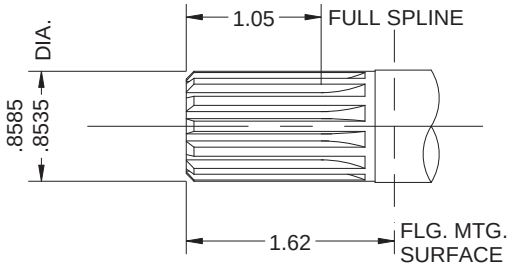


## STANDARD SAE 4-BOLT CONNECTOR PORTS

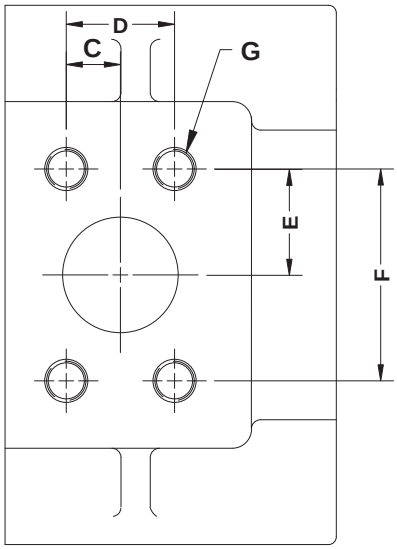


**SAE 4-BOLT CONN. PORTS**

| SIZE | INLET SIZE | OUTLET SIZE |
|---|---|---|
| 15 | 1" | 1" |
| 20 | 1" | 1" |
| 25 | 1 1/4" | 1 1/4" |
| 30 | 1 1/4" | 1 1/4" |
| 35 | 1 1/2" | 1 1/2" |
| 40 | 1 1/2" | 1 1/2" |
| 45 | 1 1/2" | 1 1/2" |

**4-BOLT CONNECTOR CHART**

| SIZE | C | D | E | F | G |
|---|---|---|---|---|---|
| 1" | .51 | 1.031 | 1.03 | 2.062 | 3/8-16NC |
| 1 1/4" | .59 | 1.188 | 1.15 | 2.313 | 7/16-14NC |
| 1 1/2" | .70 | 1.406 | 1.37 | 2.750 | 1/2-13NC |



UNLESS OTHERWISE SPECIFIED, ALL LINEAR DIMENSIONS ARE IN INCHES.

## FLANGES AVAILABLE

### B — SAE 2X4 BOLT 'B' FLANGE

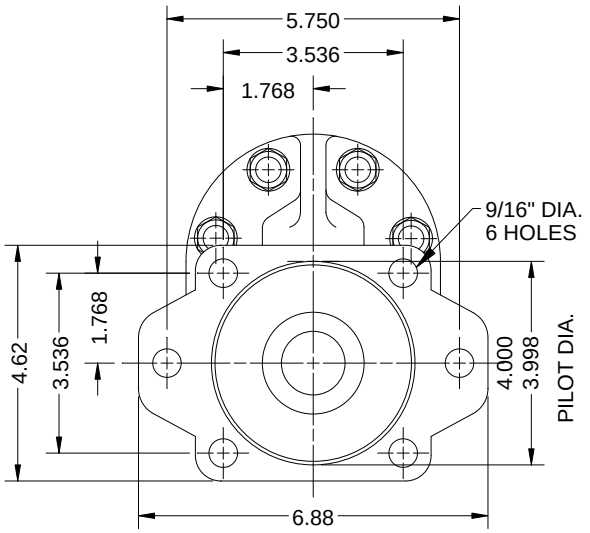


### C — SAE 2X4 BOLT 'C' FLANGE

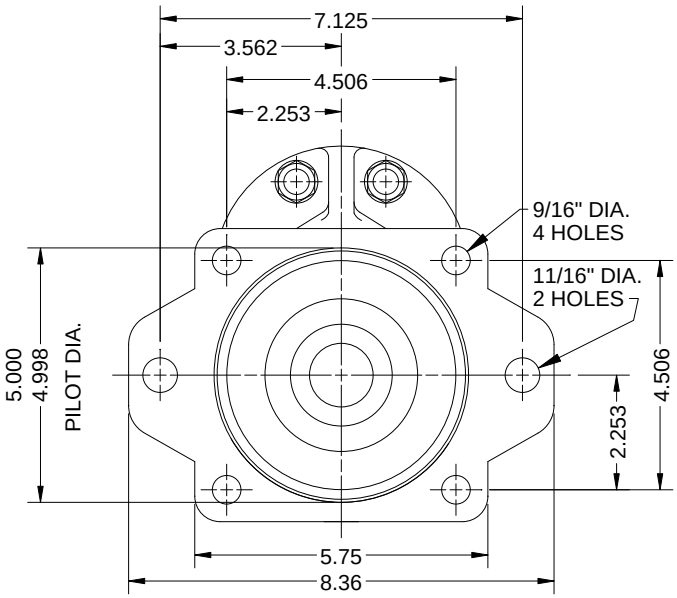


## DIMENSIONAL DATA

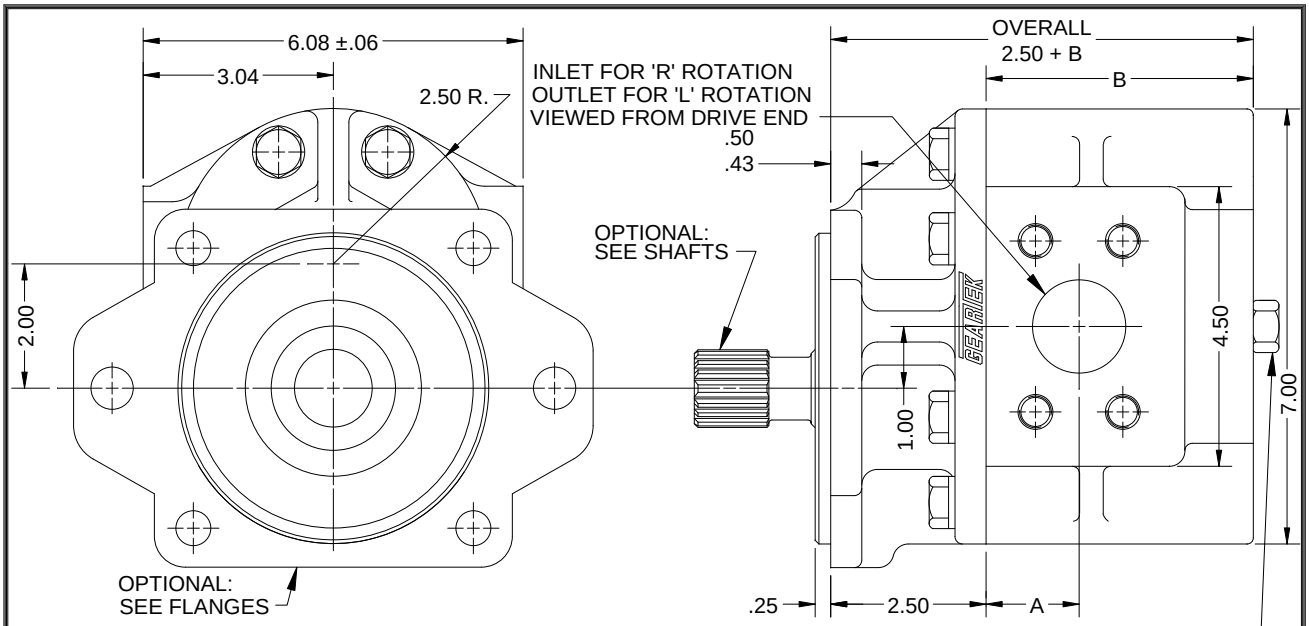


OTHER PORT TYPES AVAILABLE
CONSULT FACTORY

FOR METRIC DIMENSIONS
MULTIPLY 25.4 X IN. = mm

UNLESS HIGH PRESSURE SEAL IS USED
TAIL DRAIN MUST BE USED IF BACK
PRESSURE EXCEEDS 100 PSI ON MOTOR
9/16-18UNF-2B ON CENTERLINE
NO. 6 PORT
STEEL PLUG USED ON 'RD' PUMPS

### MOUNTING DIMENSIONS

| SIZE | A | B |
|---|---|---|
| 15 | 1.25 | 3.62 |
| 20 | 1.36 | 3.89 |
| 25 | 1.50 | 4.18 |
| 30 | 1.64 | 4.45 |
| 35 | 1.85 | 4.75 |
| 40 | 1.85 | 5.04 |
| 45 | 2.16 | 5.32 |

### PUMP MODEL EXAMPLE

**RD 25 - 1 C**

- RD — REVERSIBLE PUMP
- 25 — SIZE
- 1 — SHAFT
- C — FLANGE

### MOTOR MODEL EXAMPLE

**MD ✳ 25 - 1 C**

- MD — BI-DIRECTIONAL MOTOR
- ✳ — OPTIONAL: SPECIFY CODE 'H' THIS AREA FOR HIGH PRESSURE SEAL OTHERWISE: LEAVE BLANK
- 25 — SIZE
- 1 — SHAFT
- C — FLANGE

✳ THE OPTIONAL HIGH PRESSURE SEAL MAY BE USED WHEN DRAIN LINES ARE NOT PRACTICAL.
FOR SYSTEMS TOLERATING A DRAIN LINE, ELIMINATE THE 'H' FROM THE MODEL CODE.



UNLESS OTHERWISE SPECIFIED, ALL LINEAR DIMENSIONS ARE IN INCHES.

## GEARTEK MD15 MOTOR PERFORMANCE

SAE 10W oil @ 150 degrees F

(Typical)

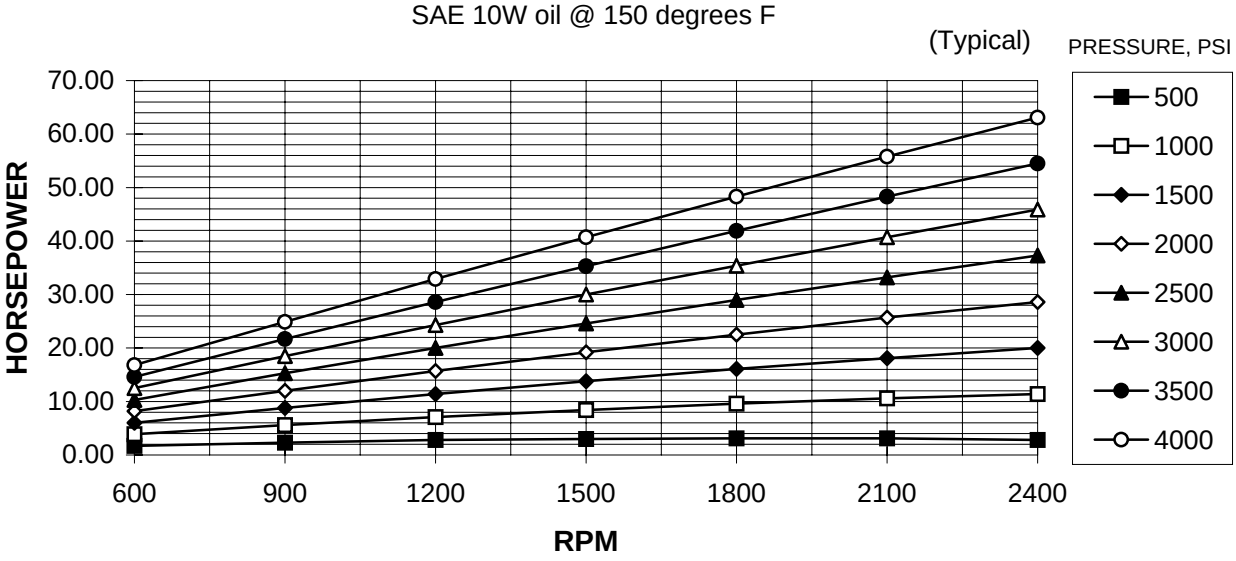


## GEARTEK MD20 MOTOR PERFORMANCE

SAE 10W oil @ 150 degrees F

(Typical)

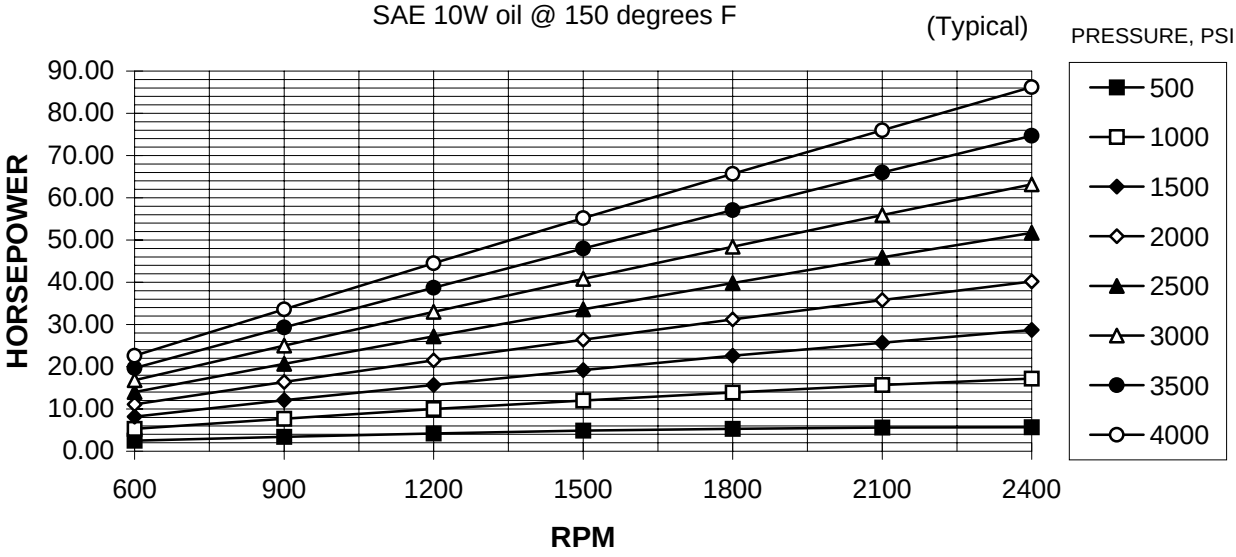


## GEARTEK MD25 MOTOR PERFORMANCE

SAE 10W oil @ 150 degrees F

(Typical)

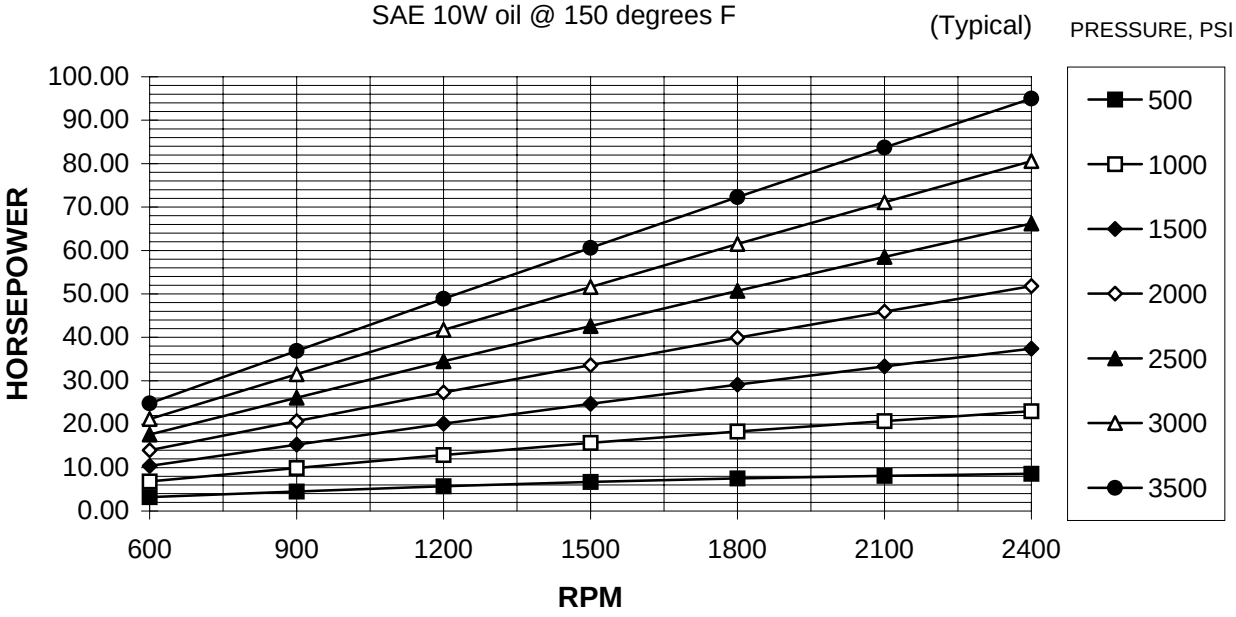

## GEARTEK MD30 MOTOR PERFORMANCE

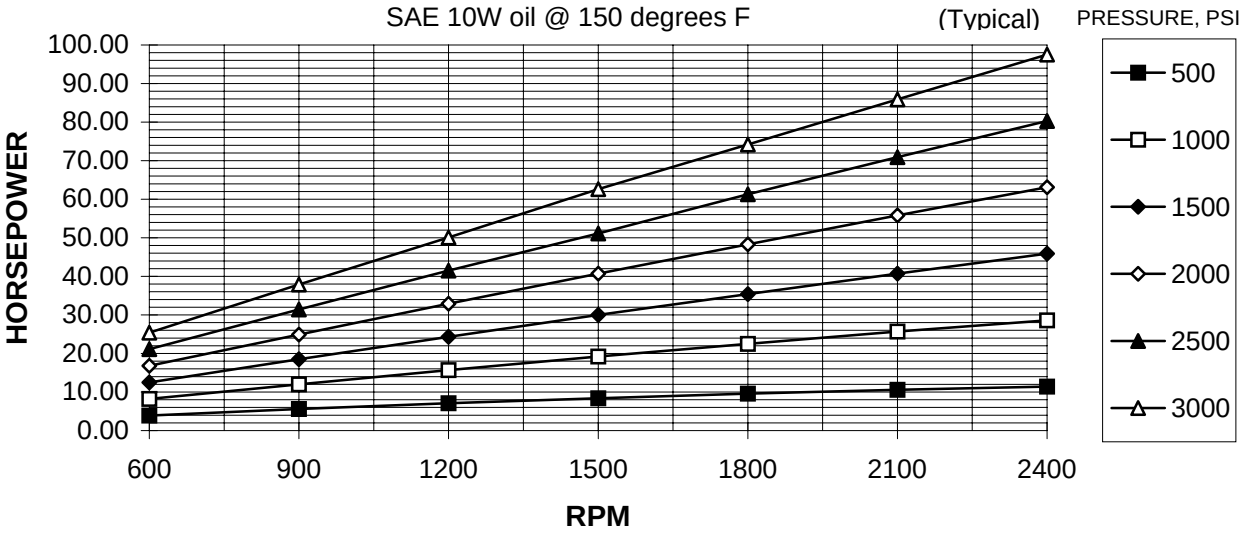


## GEARTEK MD35 MOTOR PERFORMANCE

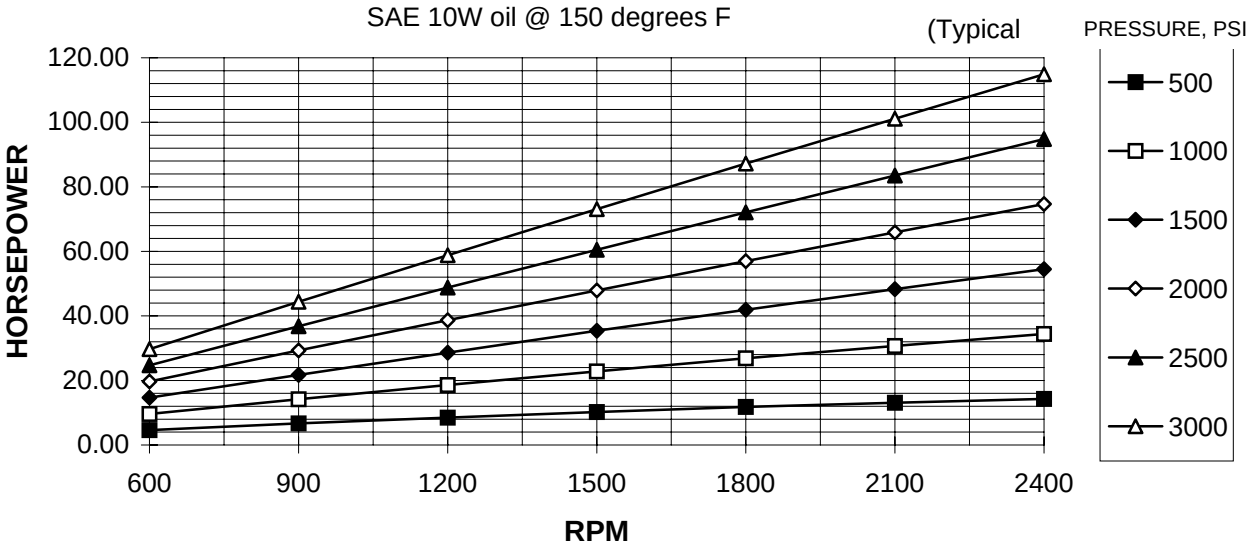


## GEARTEK MD40 MOTOR PERFORMANCE

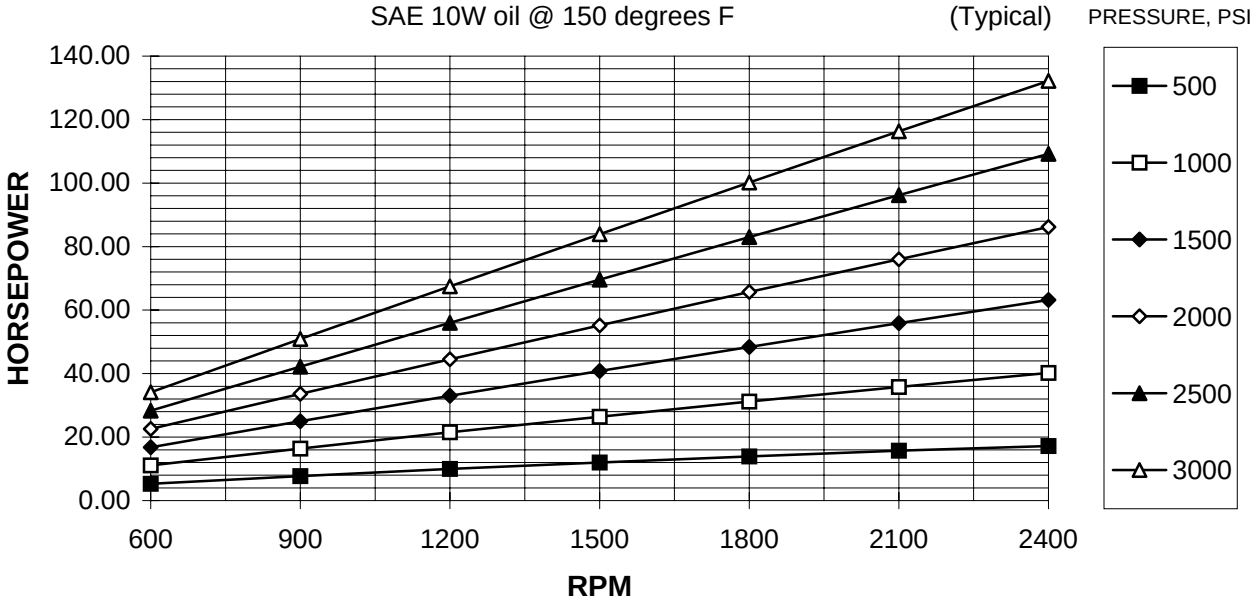

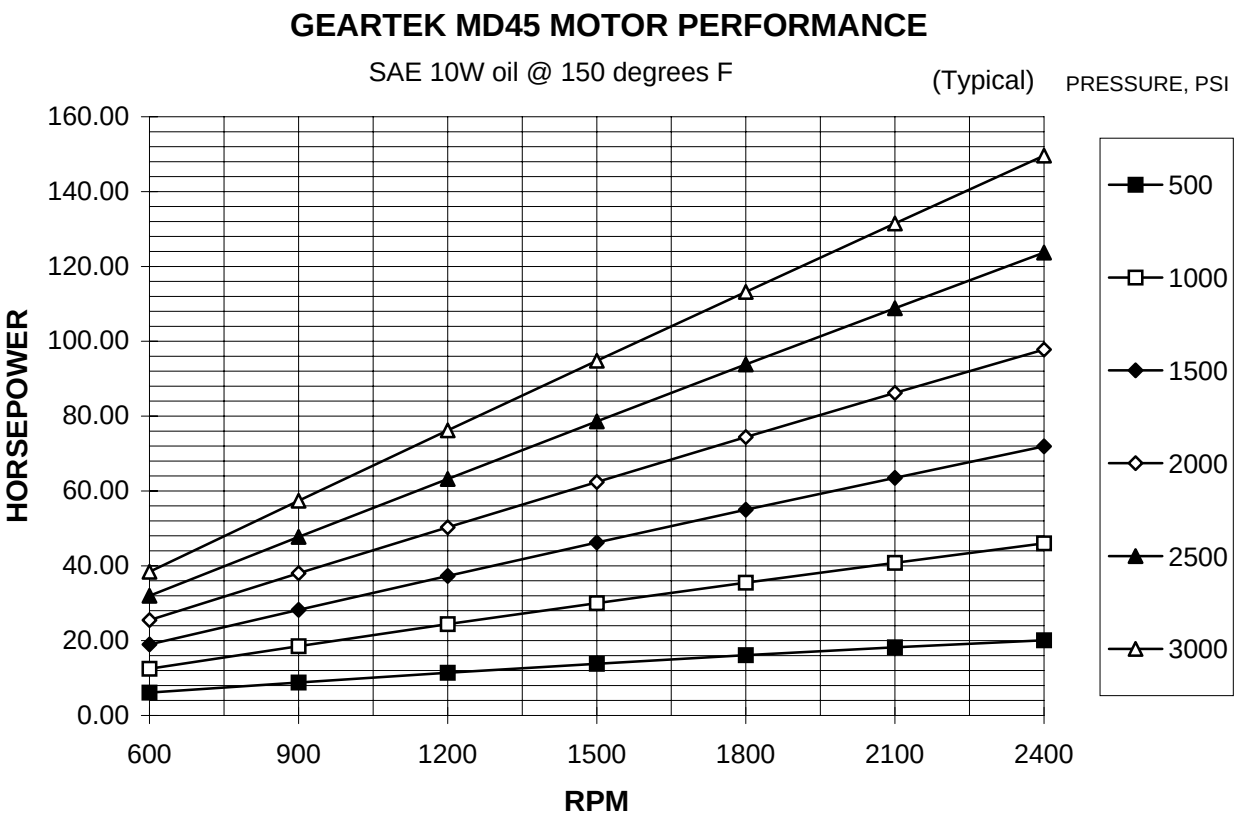


GEARTEK® FLUID POWER PUMPS AND MOTORS

DIVISION OF HYDRAULIC ANALYSIS, INC.