# 'SMD' Series

## TWO SPEED MOTOR
## COMPACT SIZE
## AUTOMATIC DOWNSHIFT OPTION
## HYDRAULIC SHIFT ON THE GO

**GEARTEK 'SMD' TWO SPEED MOTOR**

Geartek two-speed motors consist of two hydraulic gear motor units with built in shift valving. Either, high speed or high torque can be obtained, thereby improving the efficiency of winch drives, track drives, hydrostatic transmissions and other drive applications.

The internal valving controls input flow through both gear sets for low speed-high torque mode, or controls the input flow through the front section only to provide high speed-low torque mode. Displacements of each section can be mixed relative to one another to give ideal application speed and torques between high and low modes.

Advantages of these units are:

Optional automatic kick-down valve, adjustable 400-3000 psi. Unit stays in high-speed mode until preset pressure is reached. After shifting into low-speed mode, the unit shifts automatically back to high-speed mode when input flow is stopped.

Optional extreme high pressure seal, which elimates required case drain line. (Model becomes SMDH)

Compact envelope size, designed for limited space requirements

Standard shift by remote hydraulic pilot line to tank pressure. No external pressure required. Merely opening or closing pilot port to tank shifts motor.

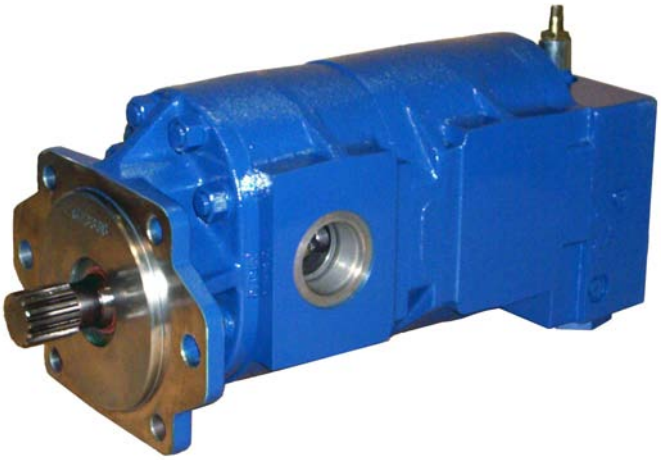

## Performance Data

| MODEL SIZE | DISPLACEMENT/REVOLUTION (THEORETICAL) | | | | MOTORS | | | |
|---|---|---|---|---|---|---|---|---|
| | U.S. GALLONS | CUBIC INCHES | CUBIC CENT. | MAX. * RPM | IN-LB TORQUE @ 2500 PSI START | IN-LB TORQUE @ 2500 PSI RUN | HP @ 2500 RPM 2500 PSI | MAX. PRESSURE PSI |
| SMD15 | .0129 | 2.98 | 48.8 | 2500 | 680 | 1050 | 38 | 3300 |
| SMD20 | .0172 | 3.97 | 65.1 | 2500 | 960 | 1430 | 50 | 3300 |
| SMD25 | .0215 | 4.97 | 81.4 | 2500 | 1240 | 1810 | 64 | 3300 |
| SMD30 | .0258 | 5.96 | 97.6 | 2500 | 1520 | 2181 | 74 | 3100 |
| SMD35 | .0301 | 6.95 | 113.9 | 2500 | 1800 | 2561 | 90 | 3000 |
| SMD40 | .0344 | 7.95 | 130.2 | 2500 | 2050 | 2940 | 105 | 3000 |
| SMD45 | .0387 | 8.94 | 146.5 | 2500 | 2350 | 3320 | 124 | 2700 |

* CONSULT FACTORY WITH TYPE APPLICATION

- CAST IRON
- PRESSURES TO 3300 PSI
- FLOWS TO 97 GPM
- HEAVY DUTY SLEEVE TYPE BEARINGS
- HIGH PRESSURE VITON® SHAFT SEALS
- PRESSURE COMPENSATED THRUST PLATES
- DESIGNED FOR HEAVY DUTY APPLICATIONS
- VARIOUS SHAFT, FLANGE AND PORT OPTIONS
- PRECISION GEARS MACHINED FROM SOLID BAR STOCK
- COMPATIBLE WITH MOST FIRE RESISTANT FLUIDS
- CONTAMINANT RESISTANT
- COMPUTER DESIGNED AND MANUFACTURED
- FLEXIBLE DESIGN FOR NEW OR OEM REPLACEMENTS
- SERVICE SUPPORTED BY DEDICATION AND INVENTORY

P. O. BOX 2160, 1506 FULTON DR.
CORINTH, MISSISSIPPI 38835

Phone: 662/286-2252 Fax: 662/287-6580 E-mail: haisales@geartek.com Http: www.geartek.com

## SHAFTS AVAILABLE

**1**

### 1 1/4"-14 TOOTH SPLINE

**SPLINE DATE**

| | |
|---|---|
| DIAMETRAL PITCH | 12/24 |
| PRESSURE ANGLE | 30° |
| NO. OF TEETH | 14 |
| MINOR DIA. | 1.062-1.050 |

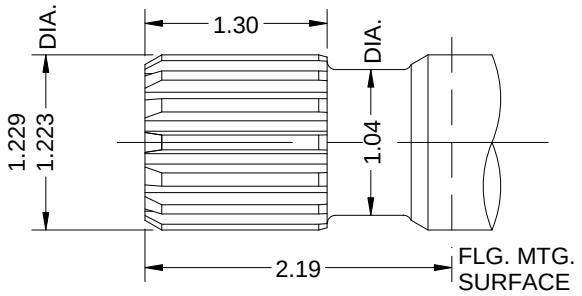


**3**

### 1 1/4" STRAIGHT

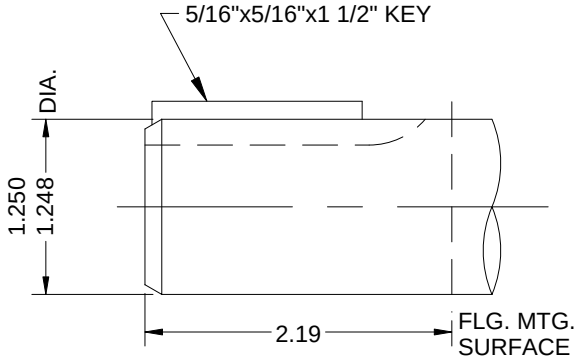


## SCHEMATIC

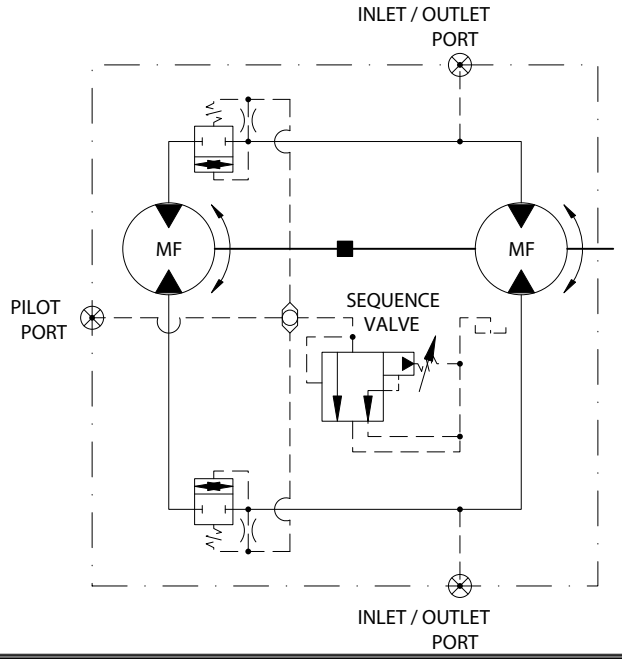


SCHEMATIC SHOWN WITH
SEQUENCE VALVE

UNLESS OTHERWISE SPECIFIED, ALL LINEAR DIMENSIONS ARE IN INCHES.

# FLANGES AVAILABLE

## B — SAE 2X4 BOLT 'B' FLANGE

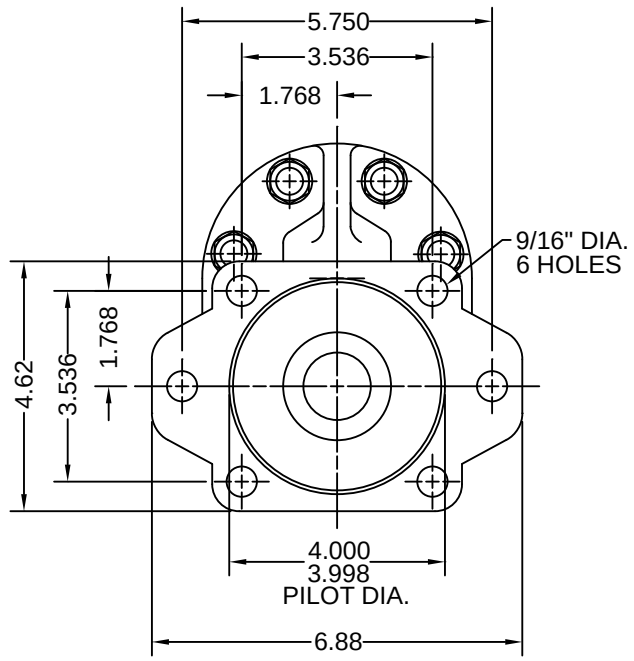


## C — SAE 2X4 BOLT 'C' FLANGE

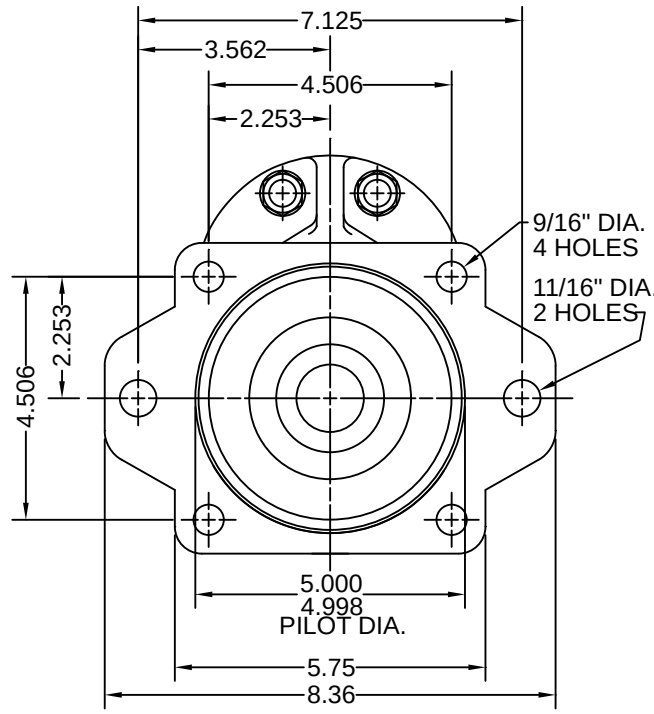


# DIMENSIONAL DATA

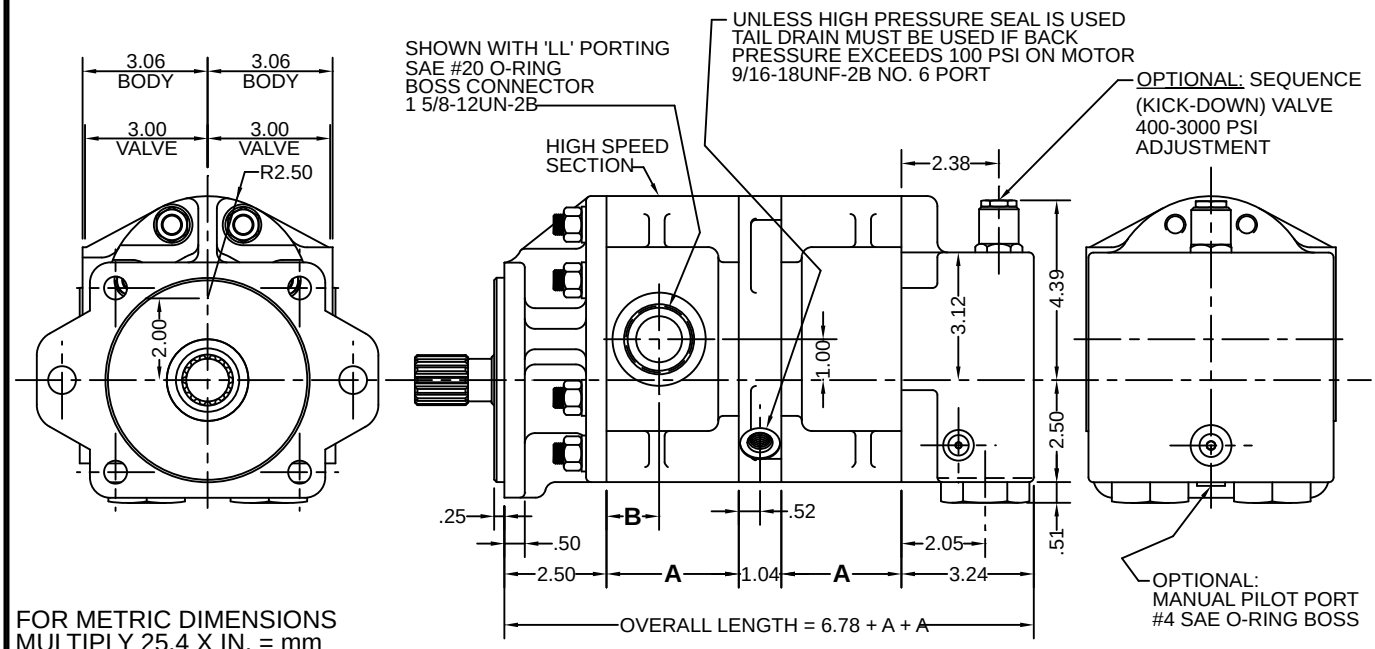


FOR METRIC DIMENSIONS
MULTIPLY 25.4 X IN. = mm

## MOUNTING DIMENSIONS

| SIZE | A | B |
|---|---|---|
| SMD15 | 3.02 | 1.25 |
| SMD20 | 3.31 | 1.36 |
| SMD25 | 3.59 | 1.50 |
| SMD30 | 3.87 | 1.64 |
| SMD35 | 4.16 | 1.85 |
| SMD40 | 4.49 | 1.85 |
| SMD45 | 4.73 | 2.16 |

BI-ROTATIONAL

OTHER PORT TYPES AVAILABLE
CONSULT FACTORY

## MODEL EXAMPLE

SM D H 25-25-1 C-S-TT

- PORT CODES STANDARD PORTING OPTIONS
- VALVE OPTIONS: S = SEQUENCE, B = NO VALVE
- FLANGE
- DRIVE SHAFT
- SECTION SIZES
- * TYPE SEAL: "BLANK" = STD. MOTOR SEAL, H = HIGH PRESSURE SEAL
- SERIES
- TWO-SPEED MOTOR

✳ THE OPTIONAL HIGH PRESSURE SEAL MAY BE USED WHEN DRAIN LINES ARE NOT PRACTICAL.
FOR SYSTEMS TOLERATING A DRAIN LINE, ELIMINATE THE 'H' FROM THE MODEL CODE.



UNLESS OTHERWISE SPECIFIED, ALL LINEAR DIMENSIONS ARE IN INCHES.

## GEARTEK SMD15 MOTOR PERFORMANCE

SAE 10W oil @ 150 degrees F

(Typical)

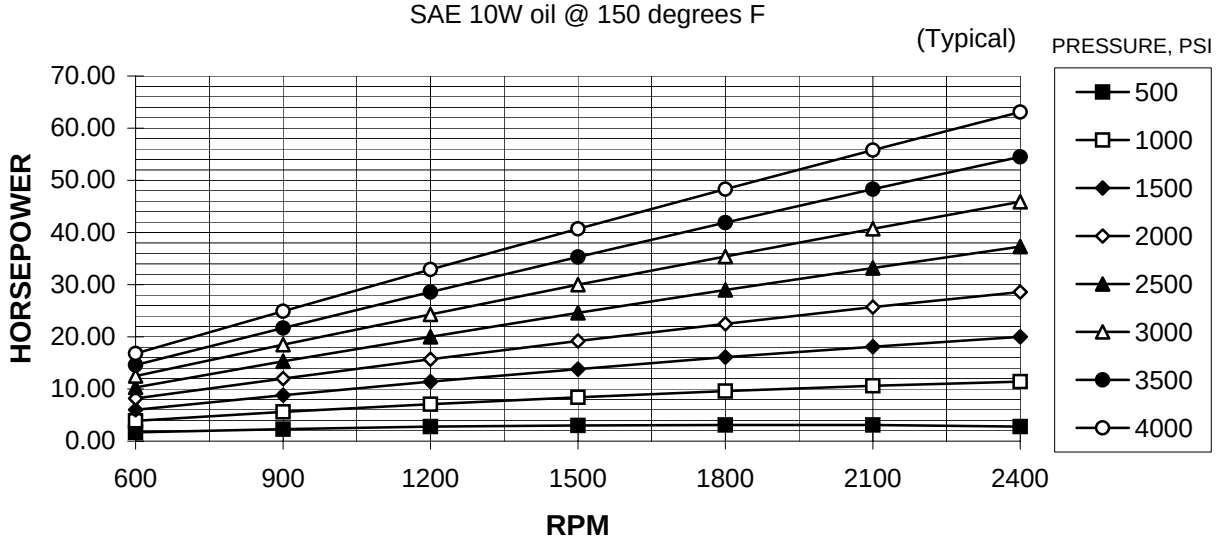


## GEARTEK SMD20 MOTOR PERFORMANCE

SAE 10W oil @ 150 degrees F

(Typical)

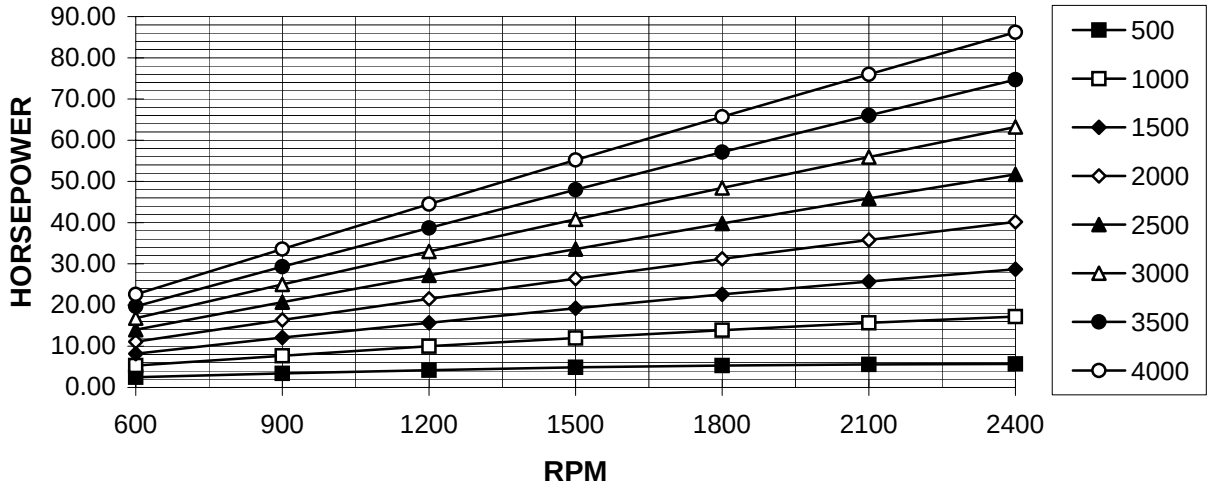


## GEARTEK SMD25 MOTOR PERFORMANCE

SAE 10W oil @ 150 degrees F

(Typical)

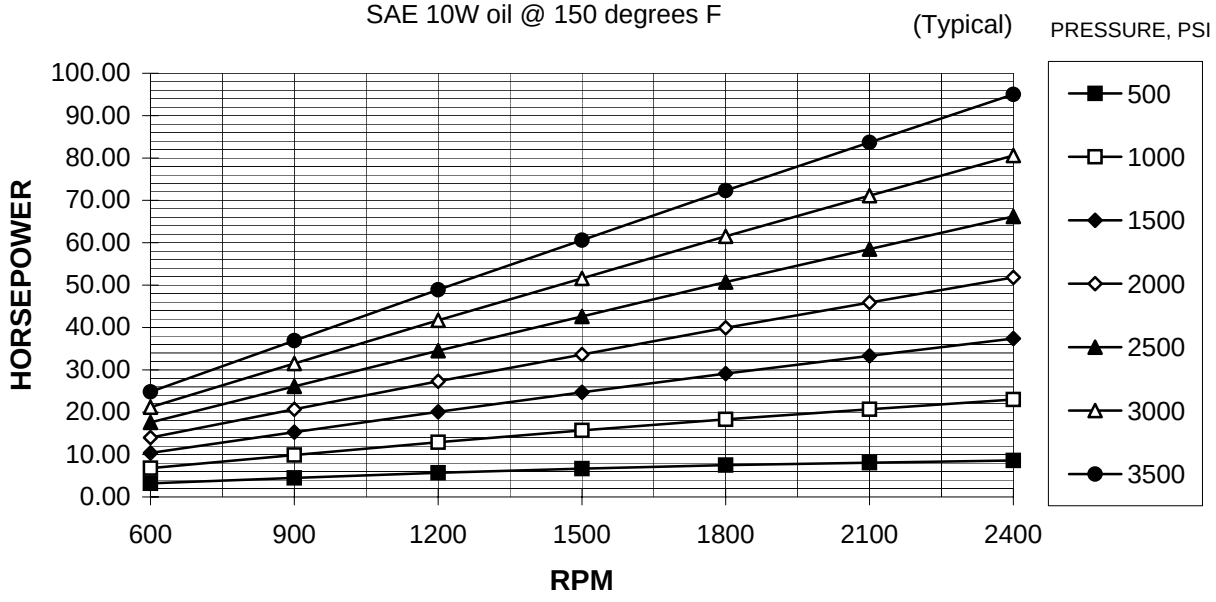

## GEARTEK SMD30 MOTOR PERFORMANCE

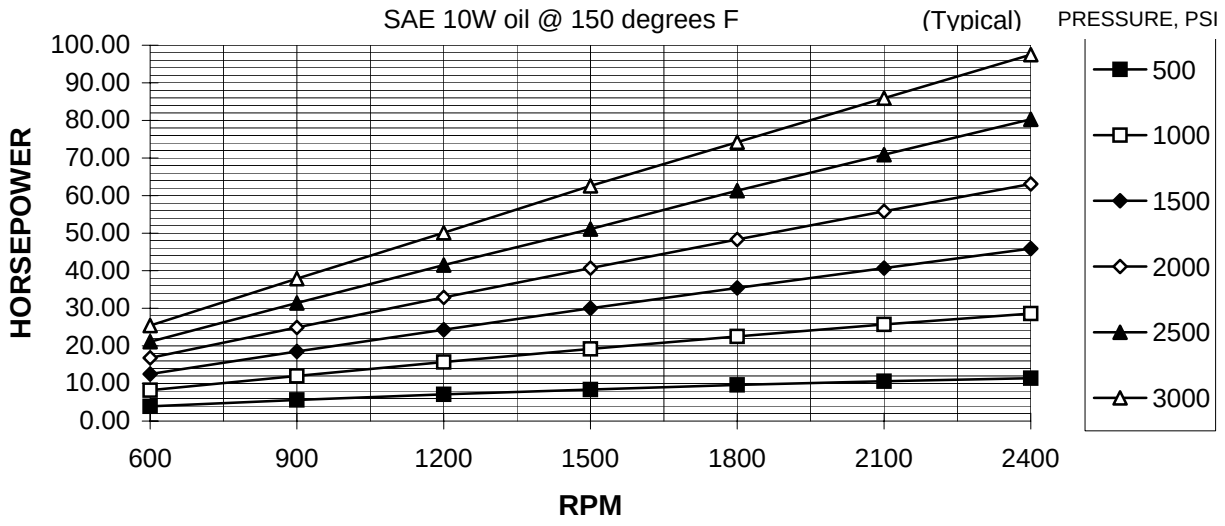


## GEARTEK SMD35 MOTOR PERFORMANCE

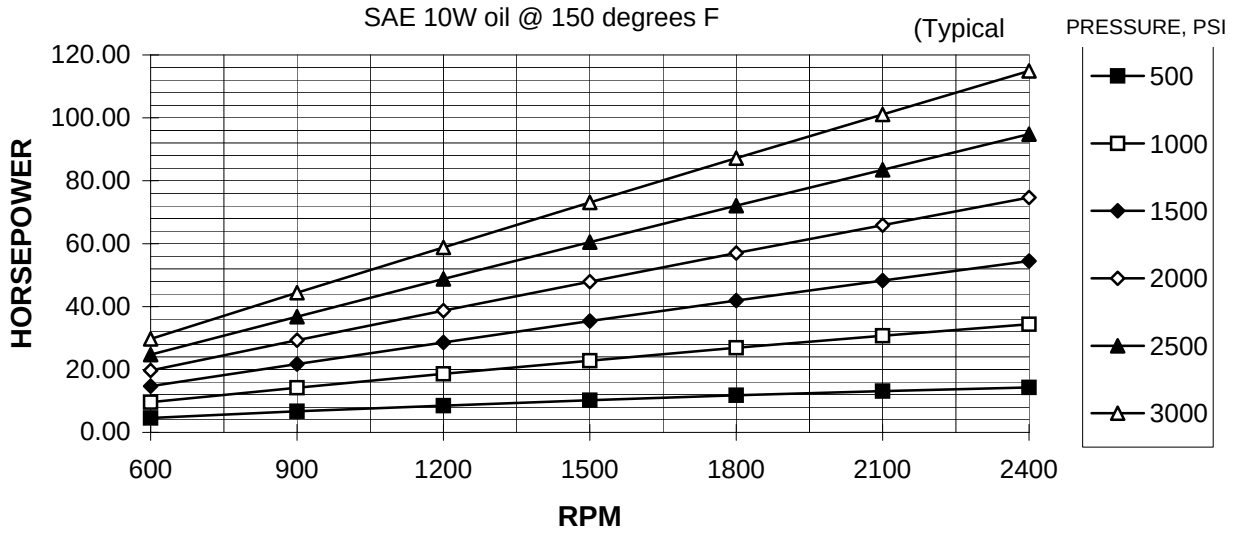


## GEARTEK SMD40 MOTOR PERFORMANCE

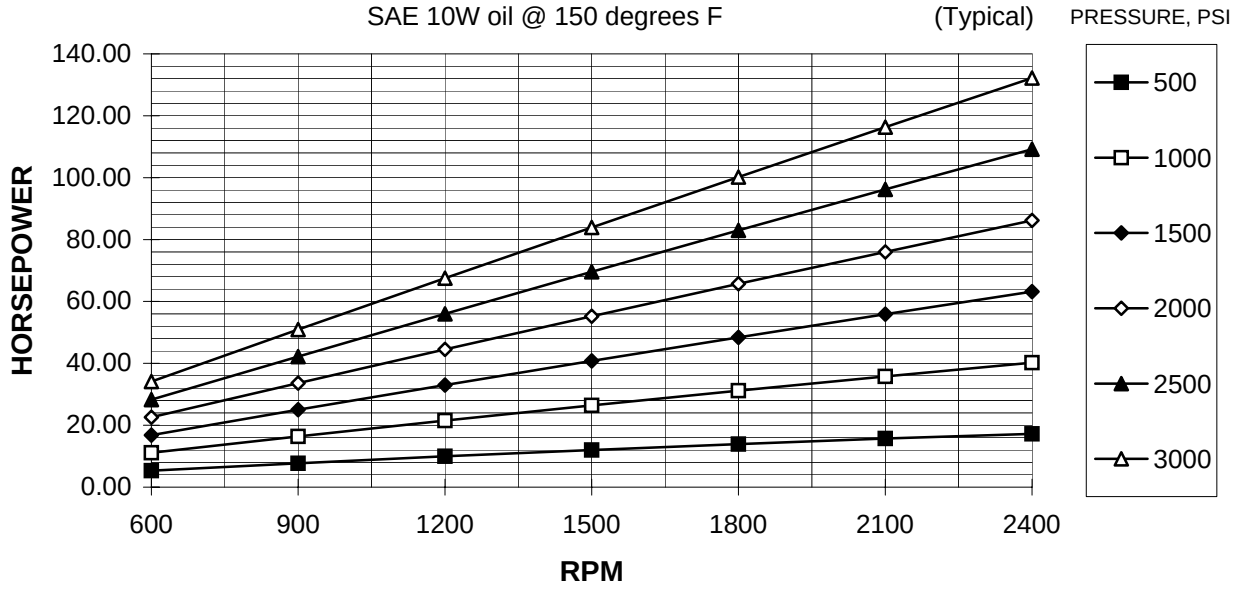

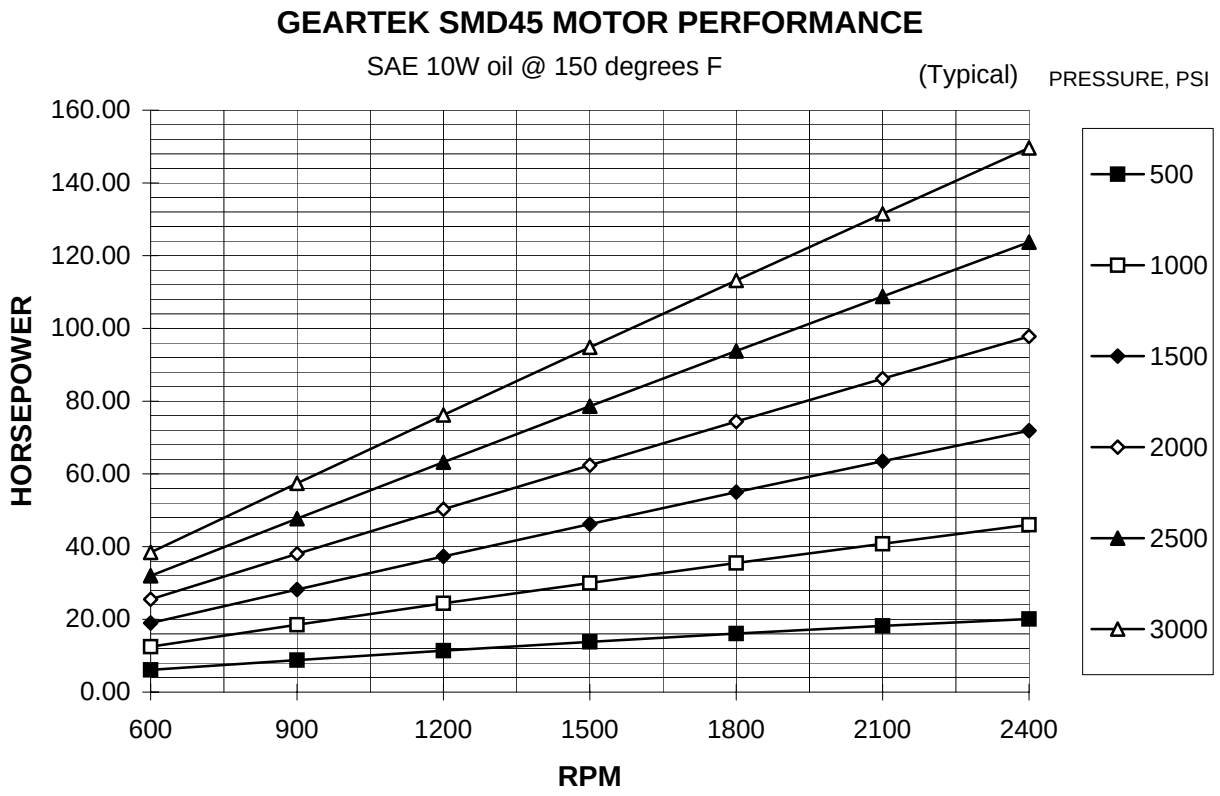


GEARTEK® FLUID POWER PUMPS AND MOTORS

DIVISION OF HYDRAULIC ANALYSIS, INC.