GEARTEK®

HYDRAULIC GEAR PUMPS AND MOTORS

# 'HDB' Series

## *PIGGY-BACK*

## Performance Data

| MODEL SIZE | DISPLACEMENT/REVOLUTION (THEORETICAL) | | | PRESSURE RATINGS | | | | MAXIMUM SPEED (RPM) |
|---|---|---|---|---|---|---|---|---|
| | | | | NORMAL DUTY | | SEVERE DUTY | | |
| | U.S. GALLONS | CUBIC INCHES | CUBIC CENT. | PSI | BAR | PSI | BAR | |
| HDB15 | .0129 | 2.98 | 48.8 | 4000 | 276 | 3800 | 262 | 2500 |
| HDB20 | .0172 | 3.97 | 65.1 | 4000 | 276 | 3800 | 262 | 2500 |
| HDB25 | .0215 | 4.97 | 81.4 | 4000 | 276 | 3100 | 214 | 2500 |
| HDB30 | .0258 | 5.96 | 97.6 | 3300 | 228 | 2600 | 179 | 2500 |
| HDB35 | .0301 | 6.95 | 113.9 | 2900 | 200 | 2300 | 160 | 2500 |
| HDB40 | .0344 | 7.95 | 130.2 | 2500* | 172 | 2000 | 138 | 2500 |
| HDB45 | .0387 | 8.94 | 146.5 | 2500* | 172 | 2000* | 138 | 2500 |

* CONSULT FACTORY WITH TYPE APPLICATION
PRESSURES MAY BE LIMITED TO SHAFT TYPE

- CAST IRON THROUGHOUT
- PRESSURES TO 4000 PSI
- FLOWS TO 97 GPM
- HEAVY DUTY SLEEVE TYPE BEARINGS
- DOUBLE VITON® SHAFT SEALS STANDARD
- PRESSURE COMPENSATED THRUST PLATES
- DESIGNED FOR HEAVY DUTY APPLICATIONS
- SINGLE AND MULTI-STAGE CONFIGURATIONS
- VARIOUS SHAFT, FLANGE AND PORT OPTIONS
- PRECISION GEARS MACHINED FROM SOLID BAR STOCK
- COMPATIBLE WITH MOST FIRE RESISTANT FLUIDS
- CONTAMINANT RESISTANT
- COMPUTER DESIGNED AND MANUFACTURED
- QUALITY CERTIFIED
- FLEXIBLE DESIGN FOR NEW OR OEM REPLACEMENTS
- SERVICE SUPPORTED BY DEDICATION AND INVENTORY

P. O. BOX 2160, 1506 FULTON DR.
CORINTH, MISSISSIPPI 38835

Phone: 662/286-2252 Fax: 662/287-6580 E-mail: haisales@geartek.com Http: www.geartek.com

## SHAFTS AVAILABLE

### 1 — 1 1/4"-14 TOOTH SPLINE

**SPLINE DATE**

| | |
|---|---|
| DIAMETRAL PITCH | 12/24 |
| PRESSURE ANGLE | 30° |
| NO. OF TEETH | 14 |
| MINOR DIA. | 1.062-1.050 |

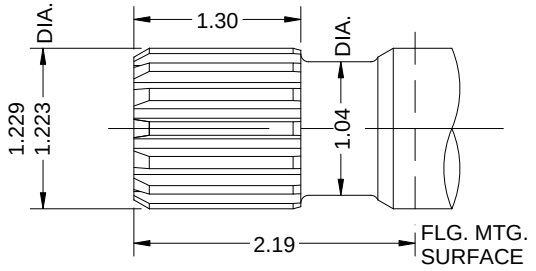


### 3 — 1 1/4" STRAIGHT

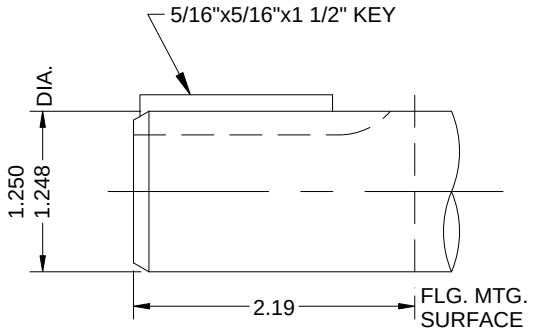


## REAR COUPLINGS AVAILABLE

### 78 — 7/8"-13 TOOTH INTERNAL SPLINE

SEE INSTRUCTION SHEET 110102
WHEN MOUNTING GEARTEK 'D/HD' ON REAR

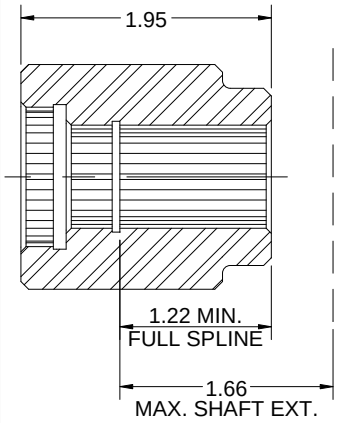


**INTERNAL SPLINE DATE**

| | |
|---|---|
| DIAMETRAL PITCH | 16/32 |
| PRESSURE ANGLE | 30° |
| NO. OF TEETH | 13 |
| MAJOR DIA. | .901-.906 |
| MINOR DIA. | .754-.759 |
| SPACE WIDTH | .1008-.1035 |

### 58 — 5/8"-9 TOOTH INTERNAL SPLINE

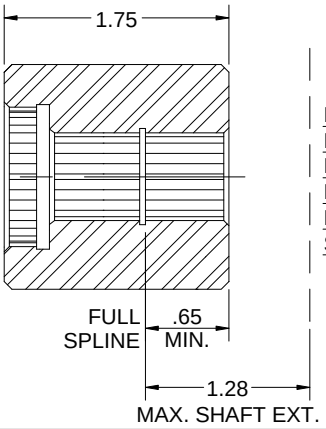


**INTERNAL SPLINE DATE**

| | |
|---|---|
| DIAMETRAL PITCH | 16/32 |
| PRESSURE ANGLE | 30° |
| NO. OF TEETH | 9 |
| MAJOR DIA. | .680-.690 |
| MINOR DIA. | .500-.510 |
| SPACE WIDTH | .1008-.1035 |

## STANDARD SAE 4-BOLT CONNECTOR PORTS

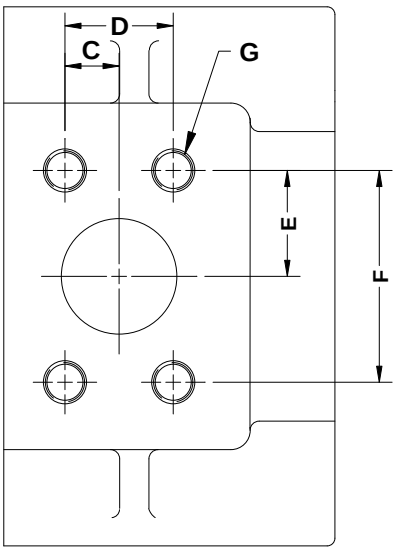


**SAE 4-BOLT CONN. PORTS**

| SIZE | INLET SIZE | OUTLET SIZE |
|---|---|---|
| DB15 | 1 1/4" | 1" |
| DB20 | 1 1/4" | 1" |
| DB25 | 1 1/2" | 1 1/4" |
| DB30 | 1 1/2" | 1 1/4" |
| DB35 | 1 1/2" | 1 1/4" |
| DB40 | 2" | 1 1/4" |
| DB45 | 2" | 1 1/4" |

**4-BOLT CONNECTOR CHART**

| SIZE | C | D | E | F | G |
|---|---|---|---|---|---|
| 1" | .51 | 1.031 | 1.03 | 2.062 | 3/8-16NC |
| 1 1/4" | .59 | 1.188 | 1.15 | 2.313 | 7/16-14NC |
| 1 1/2" | .70 | 1.406 | 1.37 | 2.750 | 1/2-13NC |
| 2" | .84 | 1.688 | 1.53 | 3.062 | 1/2-13NC |



UNLESS OTHERWISE SPECIFIED, ALL LINEAR DIMENSIONS ARE IN INCHES.

## FLANGES AVAILABLE

### B — SAE 2X4 BOLT 'B' FLANGE

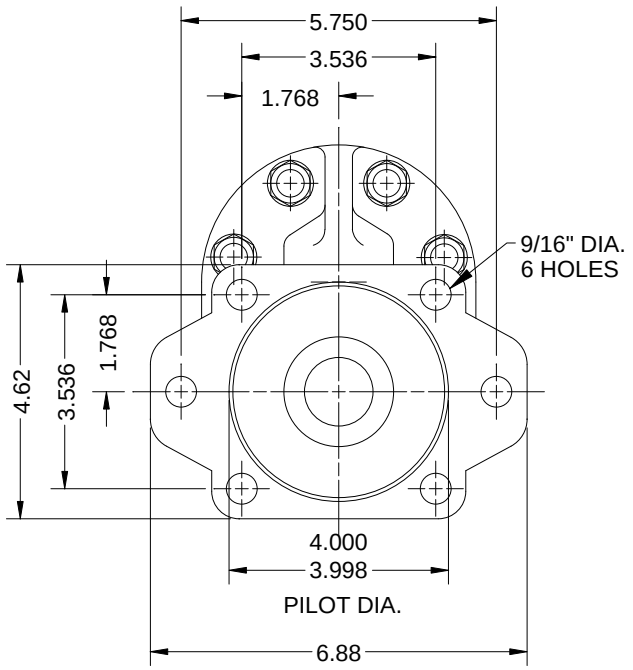


### C — SAE 2X4 BOLT 'C' FLANGE

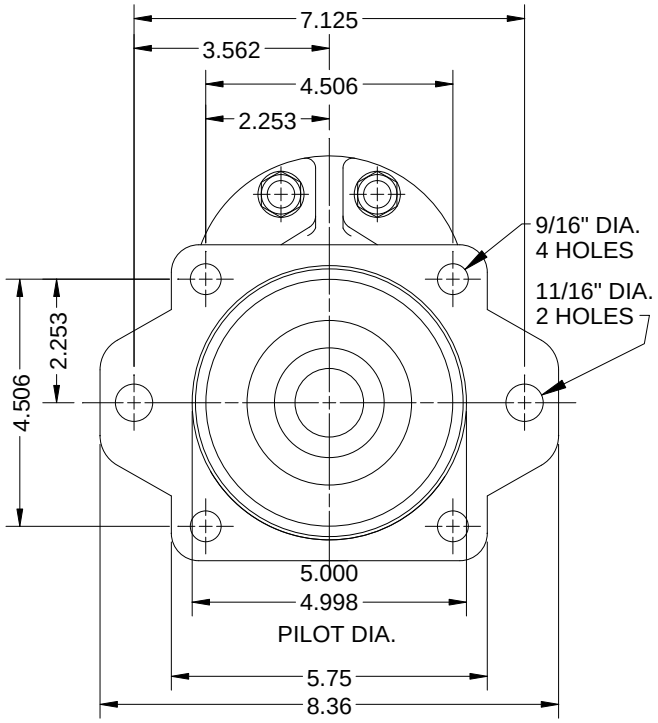


## REAR ADAPTERS AVAILABLE

### A — SAE 'A' REAR ADAPTER PLATE

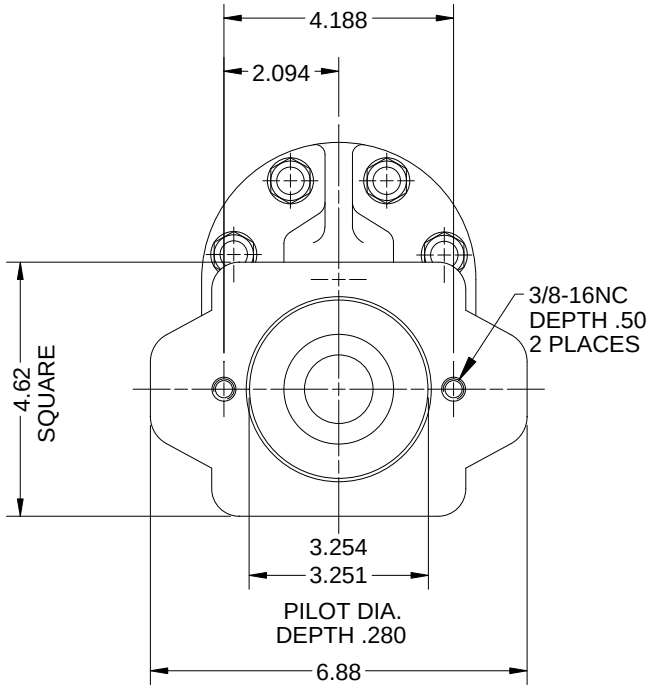


### B — SAE 'B' REAR ADAPTER PLATE

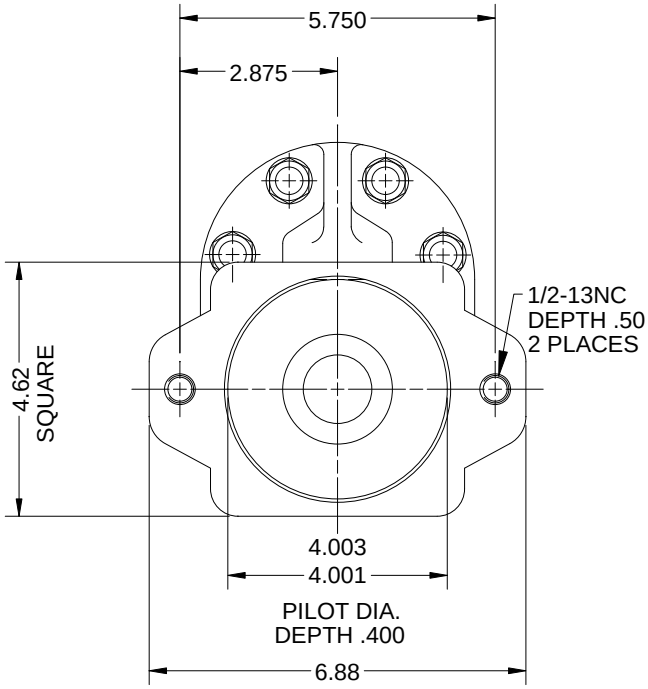


Revised: February 2, 2004

UNLESS OTHERWISE SPECIFIED, ALL LINEAR DIMENSIONS ARE IN INCHES.

# DIMENSIONAL DATA

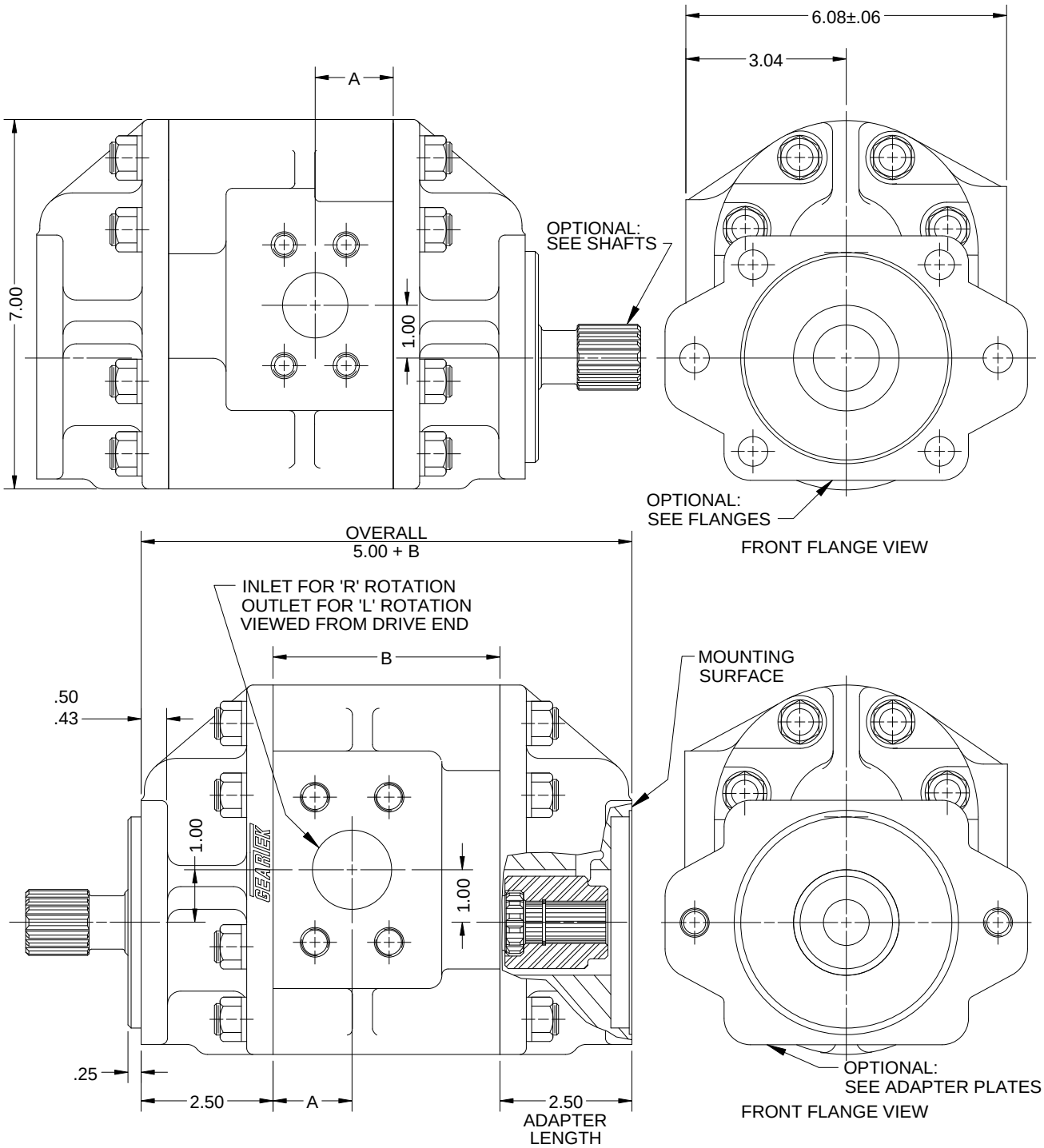


## MOUNTING DIMENSIONS

| SIZE | A | B |
|---|---|---|
| HDB15 | 1.25 | 3.02 |
| HDB20 | 1.36 | 3.81 |
| HDB25 | 1.50 | 4.09 |
| HDB30 | 1.64 | 4.38 |
| HDB35 | 1.85 | 4.66 |
| HDB40 | 1.85 | 4.95 |
| HDB45 | 2.16 | 5.23 |

FOR METRIC DIMENSIONS
MULTIPLY 25.4 X IN. = mm

OTHER PORT TYPES AVAILABLE
CONSULT FACTORY

## MODEL EXAMPLE

**HDB 25 R - 1 C - B - 78**

- HDB — SERIES
- 25 — SIZE
- R — ROTATION R=CLOCKWISE L=COUNTERCLOCKWISE
- 1 — SHAFT
- C — FLANGE
- B — REAR ADAPTER
- 78 — COUPLING

UNLESS OTHERWISE SPECIFIED, ALL LINEAR DIMENSIONS ARE IN INCHES.

# TYPICAL PERFORMANCE DATA

SAE 10W oil @ 150 DEGREES FAHRENHEIT
(150 SSU)

## HD SERIES PUMP FLOW OUTPUT @ 2500 PSI - SAE 10W OIL @ 150 DEGREES FAHRENHEIT

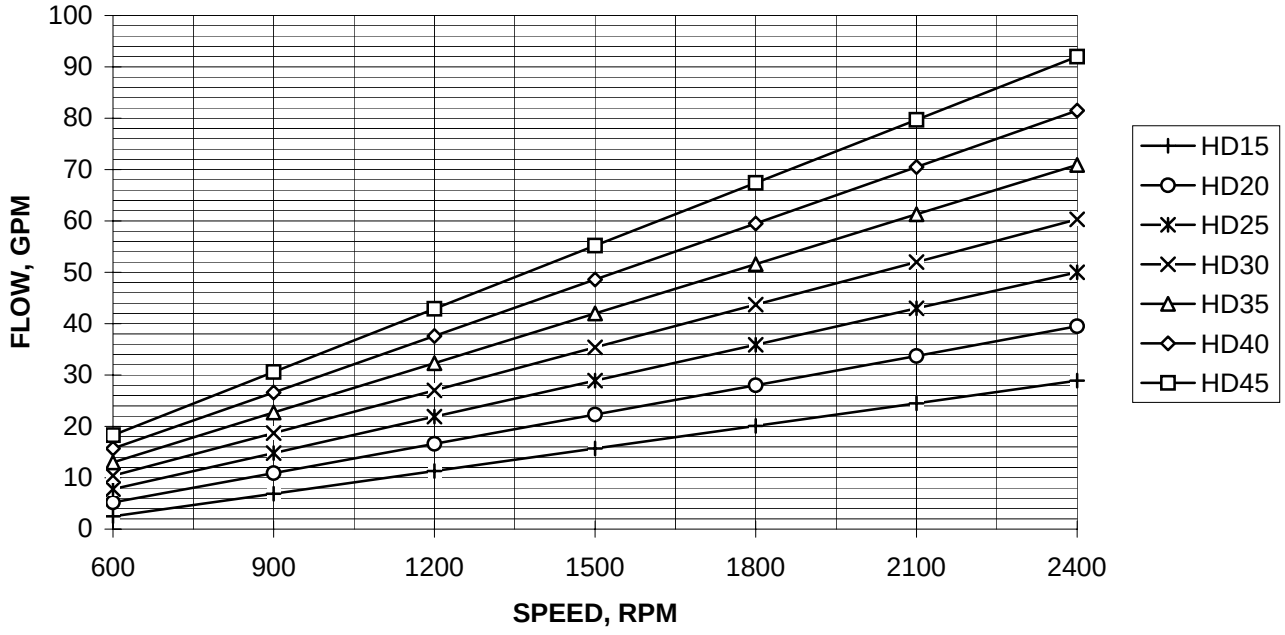


## 'HD' SERIES PUMP HORSEPOWER IN @ 2500 PSI

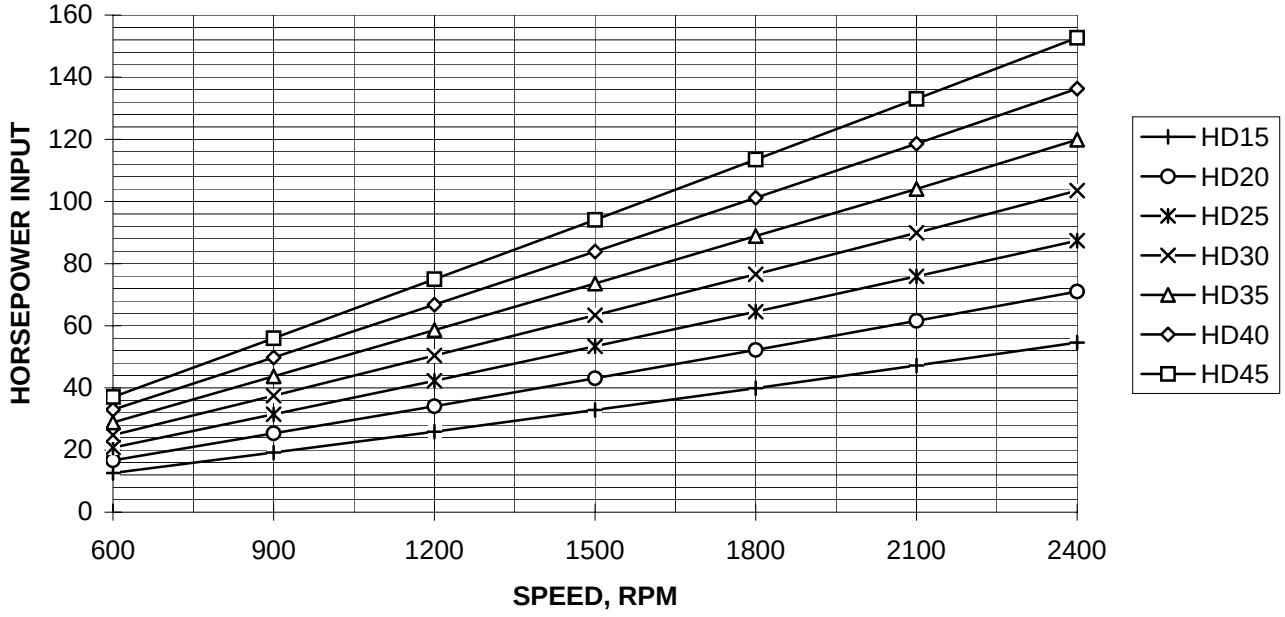


GEARTEK® FLUID POWER PUMPS AND MOTORS

DIVISION OF HYDRAULIC ANALYSIS, INC.