GEARTEK®

HYDRAULIC GEAR PUMPS AND MOTORS

# 'HD' Series

## 2 SECTION PUMP

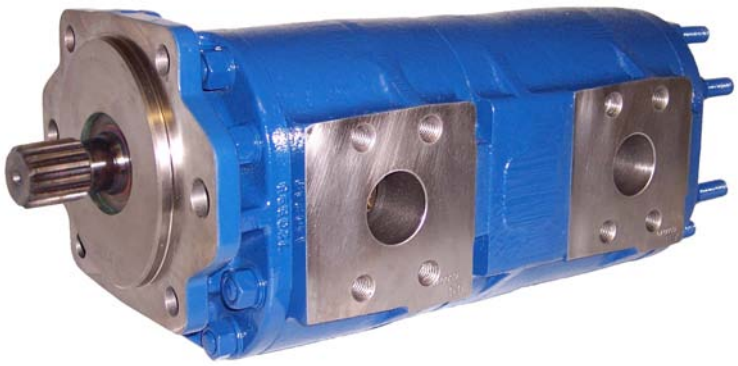

## Performance Data

| MODEL SIZE | DISPLACEMENT/REVOLUTION (THEORETICAL) | | | PRESSURE RATINGS | | | | | | | | MAXIMUM SPEED (RPM) |
|---|---|---|---|---|---|---|---|---|---|---|---|---|
| | | | | FRONT SECTION | | | | REAR SECTION | | | | |
| | | | | NORMAL DUTY | | SEVERE DUTY | | NORMAL DUTY | | SEVERE DUTY | | |
| | U.S. GALLONS | CUBIC INCHES | CUBIC CENT. | PSI | BAR | PSI | BAR | PSI | BAR | PSI | BAR | |
| HD15 | .0129 | 2.98 | 48.8 | 4000 | 276 | 3800 | 262 | 4000 | 276 | 3800 | 262 | 2500 |
| HD20 | .0172 | 3.97 | 65.1 | 4000 | 276 | 3800 | 262 | 4000 | 276 | 3300 | 228 | 2500 |
| HD25 | .0215 | 4.97 | 81.4 | 4000 | 276 | 3100 | 214 | 3300 | 228 | 2600 | 179 | 2500 |
| HD30 | .0258 | 5.96 | 97.6 | 3300 | 228 | 2600 | 179 | 2900 | 200 | 2200 | 152 | 2500 |
| HD35 | .0301 | 6.95 | 113.9 | 2900 | 200 | 2300 | 159 | 2500* | 172 | 2000* | 138 | 2500 |
| HD40 | .0344 | 7.95 | 130.2 | 2500* | 172 | 2000 | 138 | 2500* | 172 | 2000* | 138 | 2500 |
| HD45 | .0387 | 8.94 | 146.5 | 2500* | 172 | 2000* | 138 | 2500* | 172 | 2000* | 138 | 2500 |

* CONSULT FACTORY WITH TYPE APPLICATION
PRESSURES MAY BE LIMITED TO SHAFT TYPE

CAST IRON THROUGHOUT
PRESSURES TO 4000 PSI
FLOWS TO 97 GPM
HEAVY DUTY SLEEVE TYPE BEARINGS
DOUBLE VITON® SHAFT SEALS STANDARD
PRESSURE COMPENSATED THRUST PLATES
DESIGNED FOR HEAVY DUTY APPLICATIONS
SINGLE AND MULTI-STAGE CONFIGURATIONS

VARIOUS SHAFT, FLANGE AND PORT OPTIONS
PRECISION GEARS MACHINED FROM SOLID BAR STOCK
COMPATIBLE WITH MOST FIRE RESISTANT FLUIDS
CONTAMINANT RESISTANT
COMPUTER DESIGNED AND MANUFACTURED
QUALITY CERTIFIED
FLEXIBLE DESIGN FOR NEW OR OEM REPLACEMENTS
SERVICE SUPPORTED BY DEDICATION AND INVENTORY

P. O. BOX 2160, 1506 FULTON DR.
CORINTH, MISSISSIPPI 38835

Phone: 662/286-2252 Fax: 662/287-6580 E-mail: haisales@geartek.com Http: www.geartek.com

## SHAFTS AVAILABLE

**1**

### 1 1/4"-14 TOOTH SPLINE

**TORQUE LIMIT 655 FT.-LBS.**

**SPLINE DATE**

| | |
|---|---|
| DIAMETRAL PITCH | 12/24 |
| PRESSURE ANGLE | 30° |
| NO. OF TEETH | 14 |
| MINOR DIA. | 1.062-1.050 |

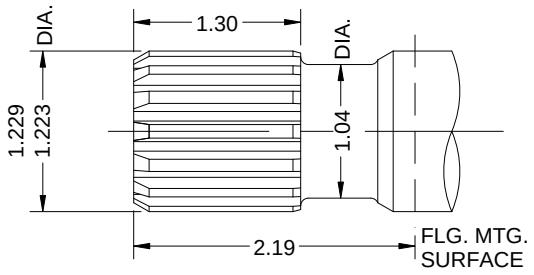


**3**

### 1 1/4" STRAIGHT

**TORQUE LIMIT 655 FT.-LBS.**

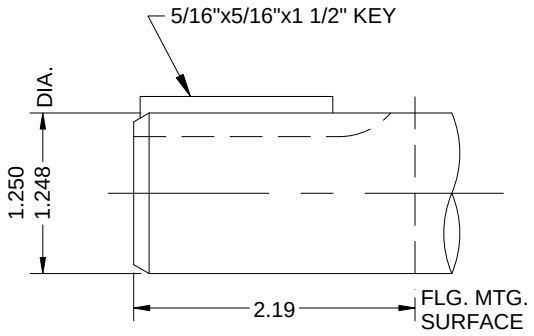


## STANDARD SAE 4-BOLT CONNECTOR PORTS

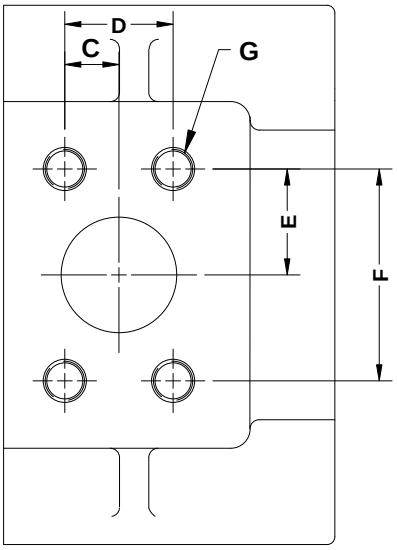


**SAE 4-BOLT CONN. PORTS**

| SIZE | INLET SIZE | OUTLET SIZE |
|---|---|---|
| HD15 | 1 1/4" | 1" |
| HD20 | 1 1/4" | 1" |
| HD25 | 1 1/2" | 1 1/4" |
| HD30 | 1 1/2" | 1 1/4" |
| HD35 | 1 1/2" | 1 1/4" |
| HD40 | 2" | 1 1/4" |
| HD45 | 2" | 1 1/4" |

**4-BOLT CONNECTOR CHART**

| SIZE | C | D | E | F | G |
|---|---|---|---|---|---|
| 1" | .51 | 1.031 | 1.03 | 2.062 | 3/8-16NC |
| 1 1/4" | .59 | 1.188 | 1.15 | 2.313 | 7/16-14NC |
| 1 1/2" | .70 | 1.406 | 1.37 | 2.750 | 1/2-13NC |
| 2" | .84 | 1.688 | 1.53 | 3.062 | 1/2-13NC |

UNLESS OTHERWISE SPECIFIED, ALL LINEAR DIMENSIONS ARE IN INCHES.

## FLANGES AVAILABLE

### B — SAE 2X4 BOLT 'B' FLANGE

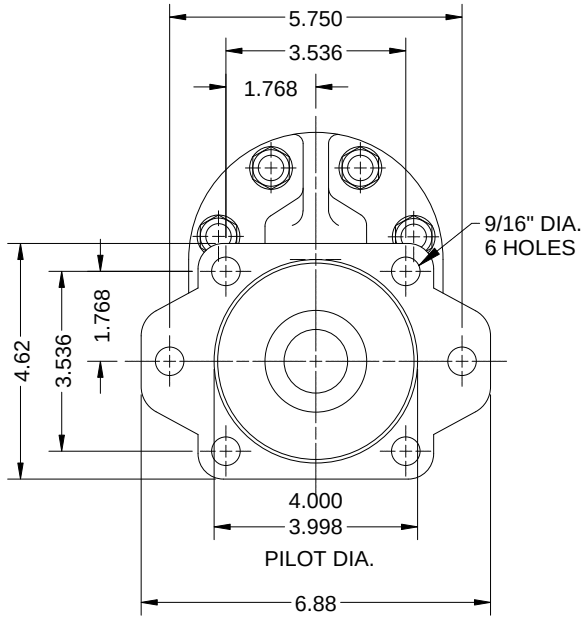


### C — SAE 2X4 BOLT 'C' FLANGE

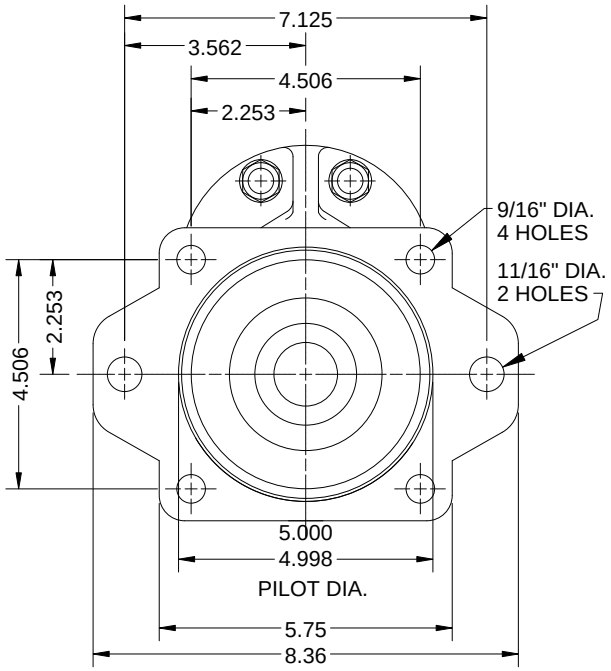


## DIMENSIONAL DATA

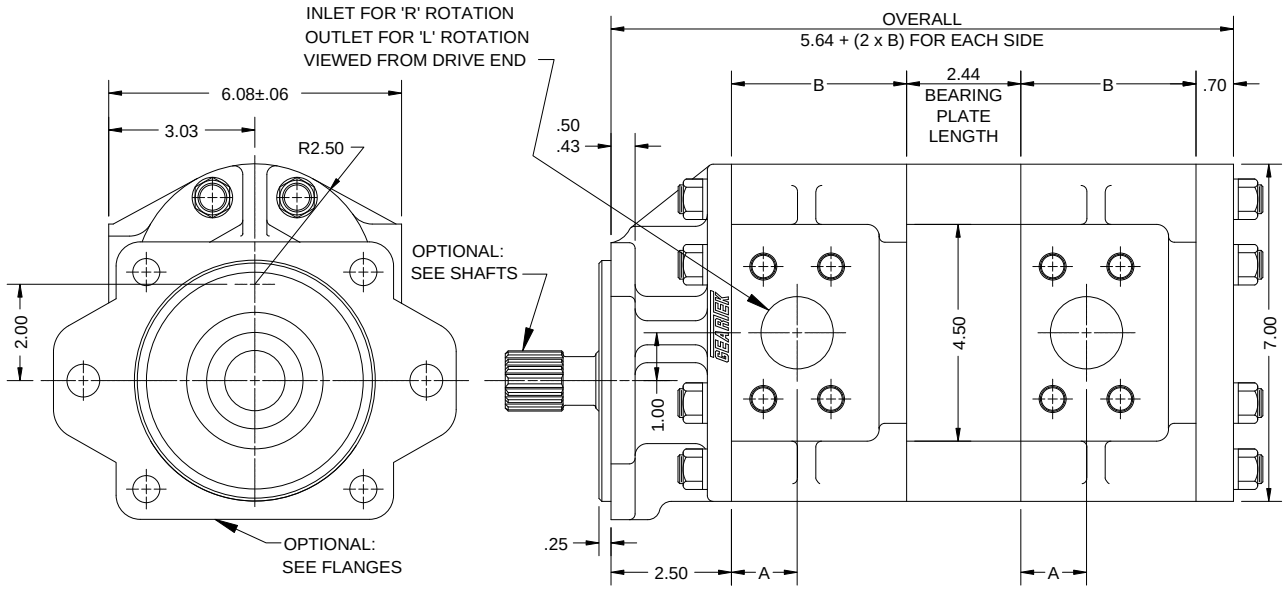


### MOUNTING DIMENSIONS

| SIZE | A | B |
|---|---|---|
| HD15 | 1.25 | 3.02 |
| HD20 | 1.36 | 3.81 |
| HD25 | 1.50 | 4.09 |
| HD30 | 1.64 | 4.38 |
| HD35 | 1.85 | 4.66 |
| HD40 | 1.85 | 4.95 |
| HD45 | 2.16 | 5.23 |

FOR METRIC DIMENSIONS
MULTIPLY 25.4 X IN. = mm

OTHER PORT TYPES AVAILABLE
CONSULT FACTORY

### MODEL EXAMPLE

**HD 25 - 25 R - 1 C**

- HD — SERIES
- 25 - 25 — SIZE
- R — ROTATION
  - R=CLOCKWISE
  - L=COUNTERCLOCKWISE
- 1 — SHAFT
- C — FLANGE

UNLESS OTHERWISE SPECIFIED, ALL LINEAR DIMENSIONS ARE IN INCHES.

# TYPICAL PERFORMANCE DATA

SAE 10W oil @ 150 DEGREES FAHRENHEIT
(150 SSU)

## HD SERIES PUMP FLOW OUTPUT @ 2500 PSI - SAE 10W OIL @ 150 DEGREES FAHRENHEIT

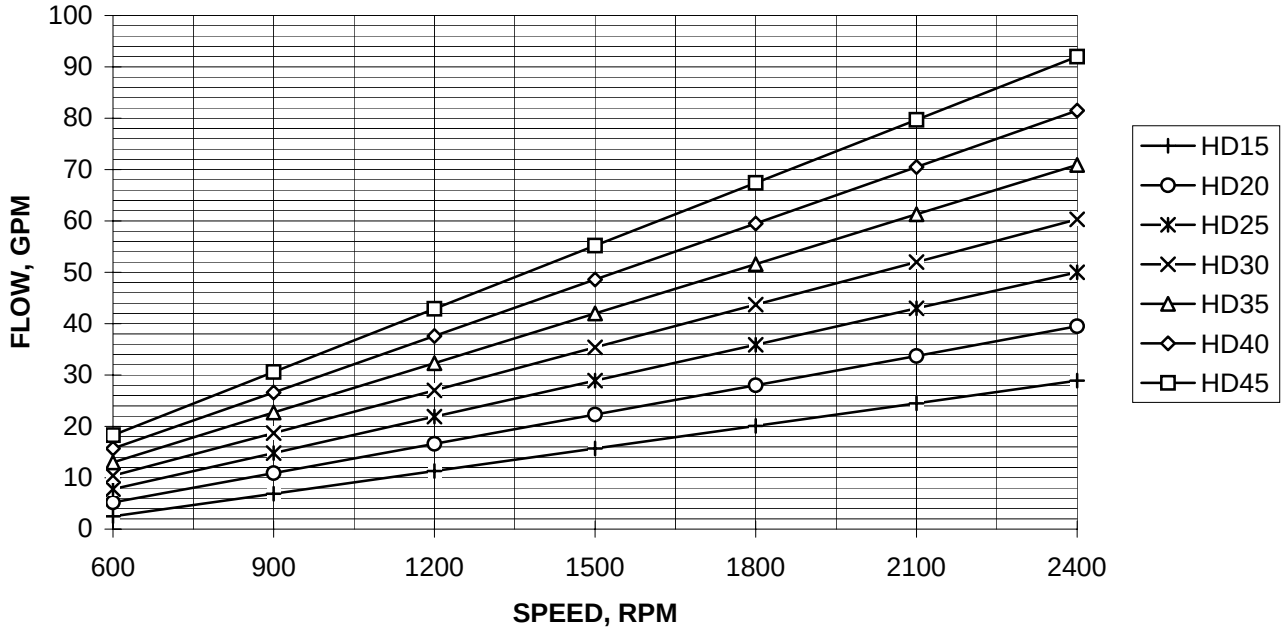


## 'HD' SERIES PUMP HORSEPOWER IN @ 2500 PSI

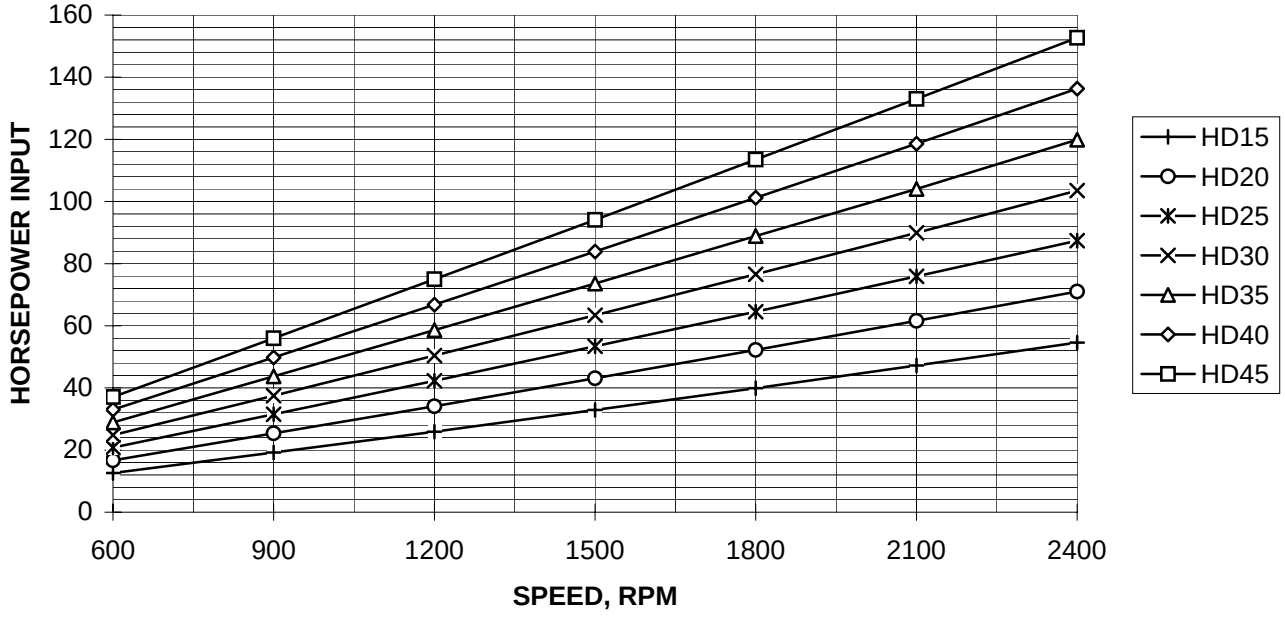


GEARTEK® FLUID POWER PUMPS AND MOTORS

DIVISION OF HYDRAULIC ANALYSIS, INC.