GEARTEK®

## HYDRAULIC GEAR PUMPS AND MOTORS

# 'CX' Series

## SINGLE PUMP w/ RELIEF VALVE

**GEARTEK 'C' SERIES WITH INTEGRAL RELIEF VALVE**

The adjustable cartridge relieves from discharge back to suction internally. Flows to 20 GPM, pressures from 100 psi to 3,000 psi.

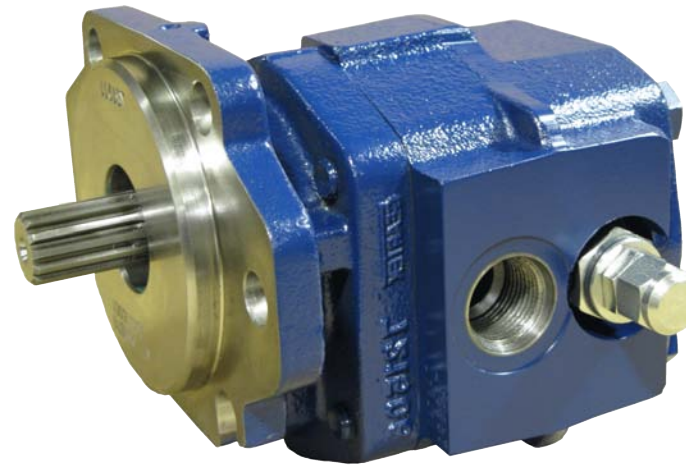

## Performance Data

| MODEL SIZE | DISPLACEMENT/REVOLUTION (THEORETICAL) | | | MAXIMUM PRESSURE | | MAXIMUM SPEED (RPM) |
|---|---|---|---|---|---|---|
| | U.S. GALLONS | CUBIC INCHES | CUBIC CENT. | PSI | BAR | |
| CX45 | .0038 | 0.88 | 14.4 | 3000 ** | 241 | 3600 |
| CX65 | .0055 | 1.27 | 20.8 | 3000 ** | 241 | 3600 |
| CX85 | .0072 | 1.66 | 27.2 | 3000 ** | 241 | 3400 *** |
| CX100 | .0085 | 1.96 | 32.1 | 3000 ** | 241 | 3300 *** |
| CX115 | .0097 | 2.24 | 36.7 | 3000 | 207 | 3100 *** |
| CX150 | .0127 | 2.93 | 48.1 | 2500 | 172 | 2800 *** |
| CX180 | .0152 | 3.51 | 57.5 | 2500 * | 172 | 2500 *** |
| CX200 | .0169 | 3.90 | 63.9 | 2500 * | 172 | 2200 *** |

* CONSULT FACTORY WITH TYPE APPLICATION - PRESSURES MAY BE LIMITED TO SHAFT TYPE
** RELIEF VALVE RATED @ 3000 PSI
*** RELIEF VALVE RATED TO 20 GPM

- CAST IRON THROUGHOUT
- PRESSURES TO 3000 PSI
- FLOWS TO 20 GPM
- HEAVY DUTY SLEEVE TYPE BEARINGS
- DOUBLE VITON® SHAFT SEALS STANDARD
- PRESSURE COMPENSATED THRUST PLATES
- DESIGNED FOR HEAVY DUTY APPLICATIONS
- SINGLE STAGE CONFIGURATIONS
- VARIOUS SHAFT, FLANGE AND PORT OPTIONS
- PRECISION GEARS MACHINED FROM SOLID BAR STOCK
- COMPATIBLE WITH MOST FIRE RESISTANT FLUIDS
- CONTAMINANT RESISTANT
- COMPUTER DESIGNED AND MANUFACTURED
- QUALITY CERTIFIED
- FLEXIBLE DESIGN FOR NEW OR OEM REPLACEMENTS
- SERVICE SUPPORTED BY DEDICATION AND INVENTORY

P. O. BOX 2160, 1506 FULTON DR.
CORINTH, MISSISSIPPI 38835

Phone: 662/286-2252 Fax: 662/287-6580 E-mail: haisales@geartek.com Http: www.geartek.com

# SHAFTS AVAILABLE

## 1 5/8"-9 TOOTH SPLINE

**AVAILABLE ON 45 THRU 100 SIZES ONLY**
**TORQUE LIMIT 52 FT.-LBS.**

**FLAT ROOT SIDE FIT**

| | |
|---|---|
| DIAMETRAL PITCH | 16/32 |
| PRESSURE ANGLE | 30° |
| NO. OF TEETH | 9 |
| MINOR DIA. | .465-.475 |

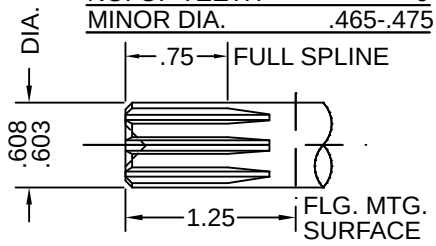


## 2 7/8"-13 TOOTH SPLINE

**TORQUE LIMIT 184 FT.-LBS.**

**FLAT ROOT SIDE FIT**

| | |
|---|---|
| DIAMETRAL PITCH | 16/32 |
| PRESSURE ANGLE | 30° |
| NO. OF TEETH | 13 |
| MINOR DIA. | .722-.733 |

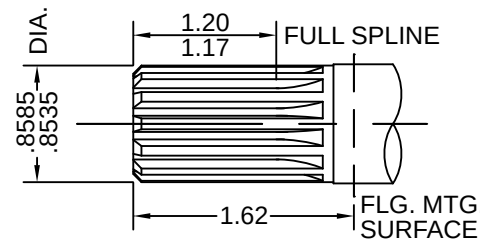


## 5 7/8" STRAIGHT

**TORQUE LIMIT 184 FT.-LBS.**

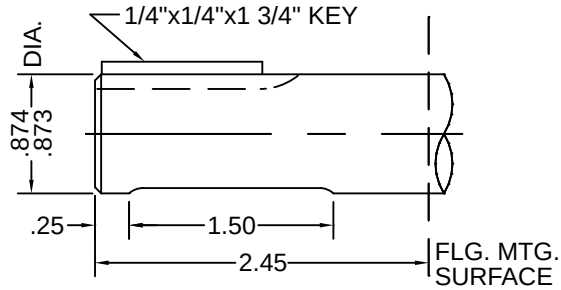


## 6 3/4" STRAIGHT

**AVAILABLE ON 45 THRU 115 SIZES ONLY**
**TORQUE LIMIT 105 FT.-LBS.**

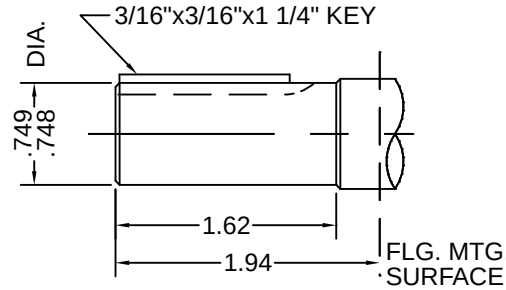


# PORTS AVAILABLE

## 3 SAE 4-BOLT CONNECTOR

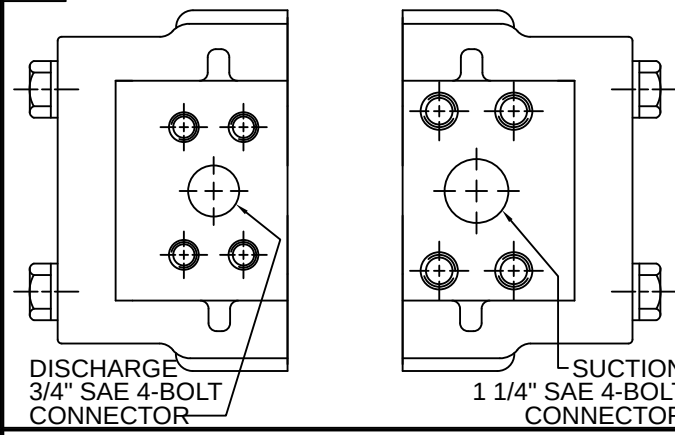


## 5 SIDE PORTED SAE STRAIGHT THREAD

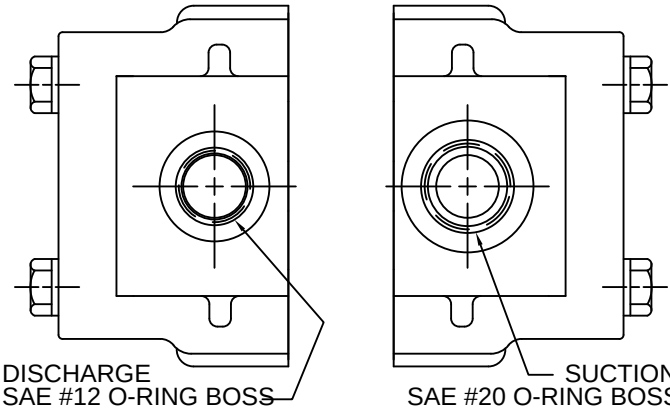


REVISED 02/22/2011

UNLESS OTHERWISE SPECIFIED, ALL LINEAR DIMENSIONS ARE IN INCHES.

# FLANGES AVAILABLE

## A SAE 2 BOLT 'A' FLANGE

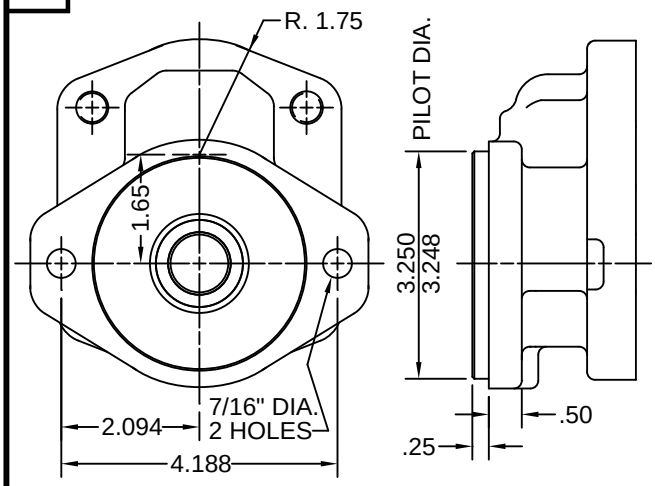


## B SAE 'B' FLANGE

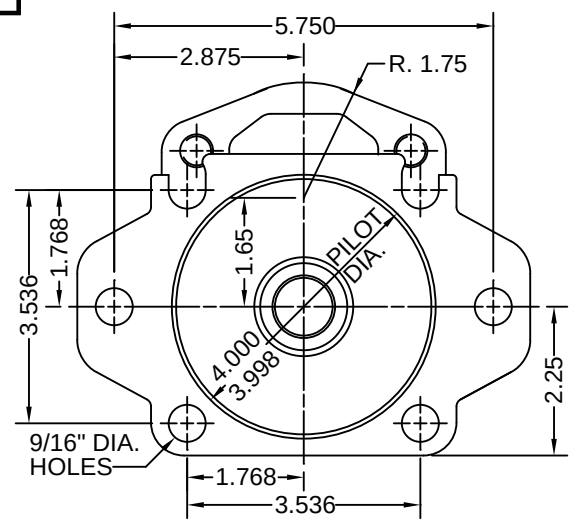


## R 4 BOLT ROUND FLANGE

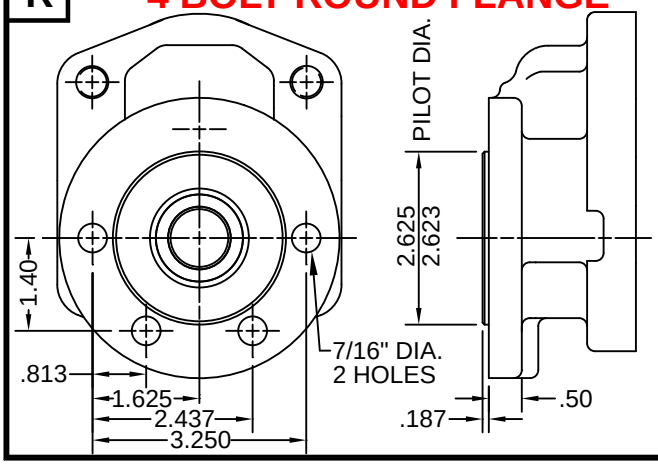


| MOUNTING DIMENSIONS | | |
|---|---|---|
| SIZE | A | B |
| CX45 | 1.06* | 2.98 |
| CX65 | 1.06 | 3.20 |
| CX85 | 1.06 | 3.41 |
| CX100 | 1.06 | 3.57 |
| CX115 | 1.25 | 3.73 |
| CX150 | 1.25 | 4.10 |
| CX180 | 1.25 | 4.42 |
| CX200 | 1.25 | 4.64 |

* .88 DISCHARGE PORT C/L FOR CX45 SIZE ONLY ALL OTHER DISC. C/L'S SAME AS SUC.

## MODEL EXAMPLE

C X 45 - 2 B - 5 - 30

- SERIES
- w/ CROSS-OVER RELIEF VALVE
- SIZE
- SHAFT
- FLANGE
- PORTS (OTHER PORT TYPES AVAILABLE CONSULT FACTORY)
- PRESSURE SETTING RELIEF VALVE RATED 100 PSI THRU 3000 PSI CODE EXAMPLES: 01 = 100 PSI, 30 = 3000 PSI

## DIMENSIONAL DATA

FOR METRIC DIMENSIONS MULTIPLY 25.4 X IN. = mm

OTHER PORT TYPES AVAILABLE CONSULT FACTORY

LOCATION OF VALVE CARTRIDGE DEPENDANT ON APPLICATION CONSULT FACTORY

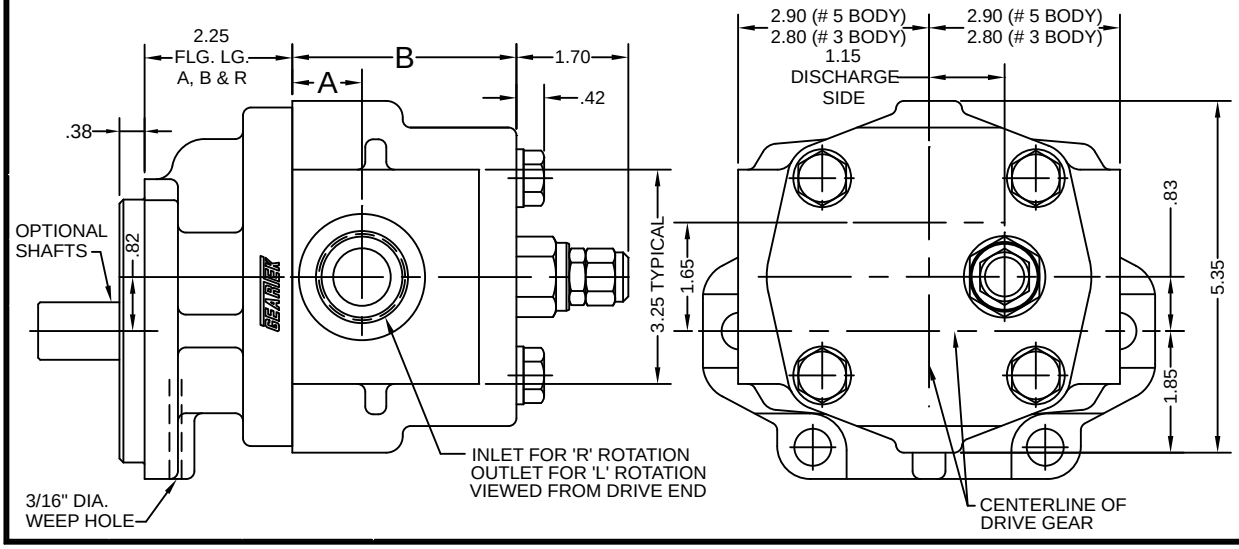


UNLESS OTHERWISE SPECIFIED, ALL LINEAR DIMENSIONS ARE IN INCHES.

# TYPICAL PERFORMANCE DATA

SAE 10W oil @ 150 DEGREES FAHRENHEIT
(150 SSU)

## 'C' Series Typical Pump Flow @ 2500 PSI

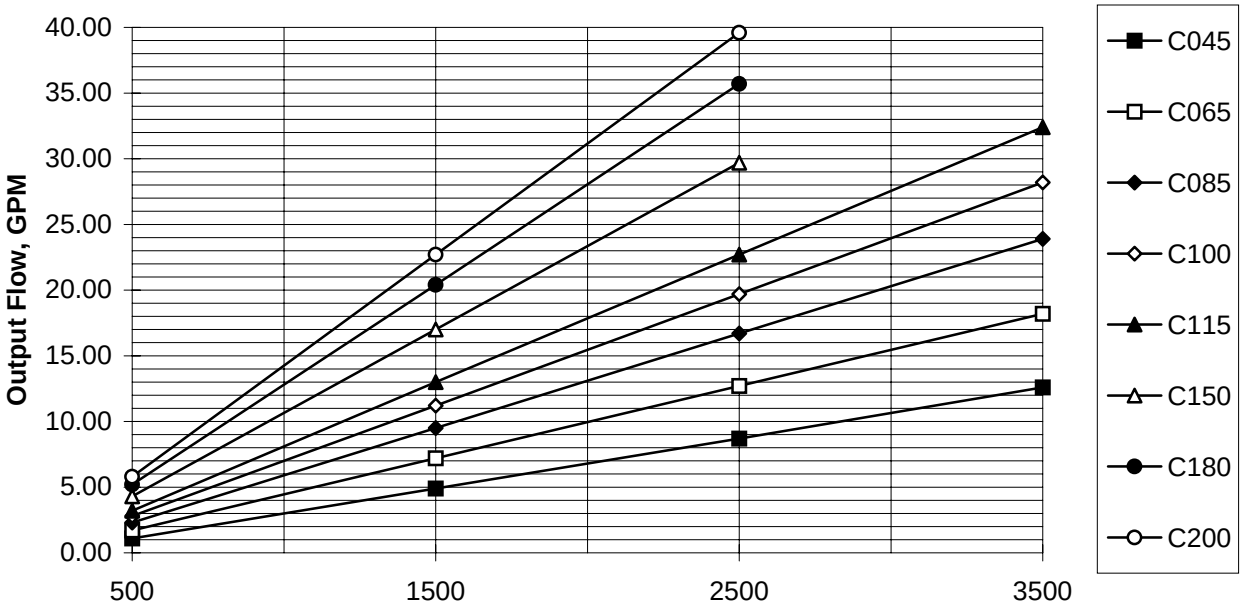


## 'C' Series Pump Horsepower In @ 2500 PSI

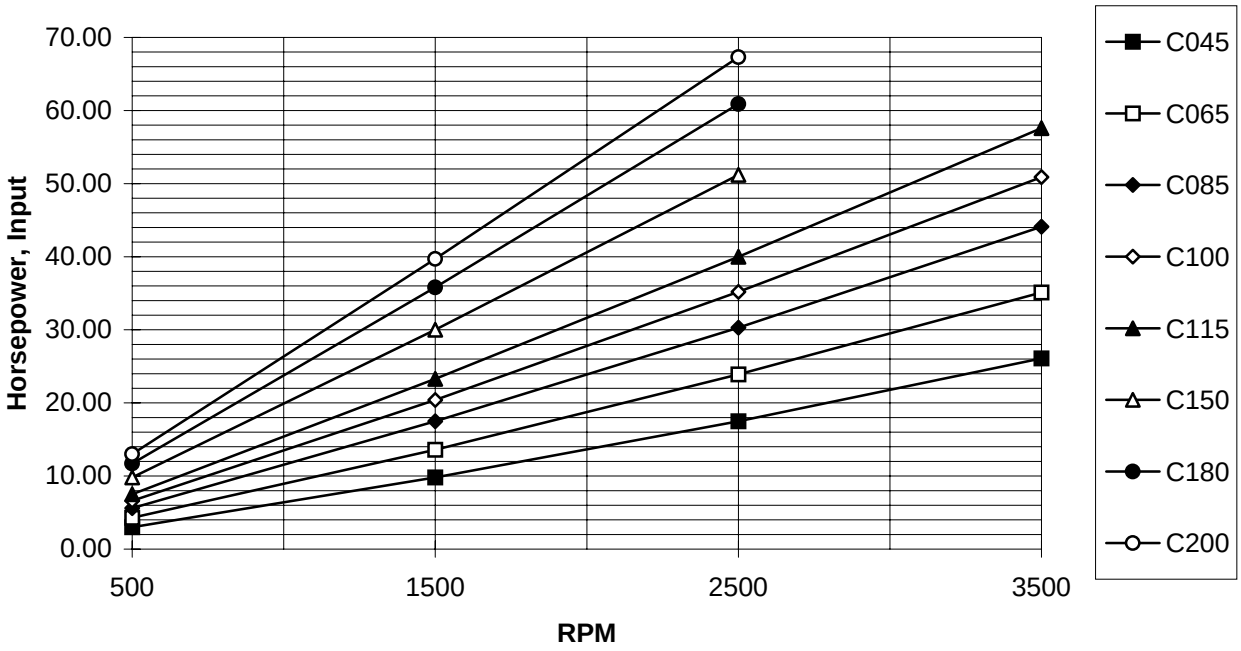


GEARTEK® FLUID POWER PUMPS AND MOTORS

DIVISION OF HYDRAULIC ANALYSIS, INC.