GEARTEK®

HYDRAULIC GEAR PUMPS AND MOTORS

# 'F' Series

## SINGLE PUMP

## TANDEM AND PIGGY BACK AVAILABLE

## Performance Data

| MODEL SIZE | DISPLACEMENT/REVOLUTION (THEORETICAL) | | | | | | |
|---|---|---|---|---|---|---|---|
| | | | | MIN. | MAX. | MAXIMUM PRESSURE | |
| | U.S. GALLONS | CUBIC INCHES | CUBIC CENT. | RPM | RPM | PSI | BAR |
| F45 | .0386 | 8.92 | 146.2 | 600 | 2500 | 4000* | 276 |
| F50 | .0427 | 9.86 | 161.6 | 600 | 2500 | 3800* | 262 |
| F55 | .0470 | 10.86 | 178.0 | 600 | 2500 | 3400* | 234 |
| F66 | .0570 | 13.17 | 215.9 | 600 | 2500 | 2900* | 200 |
| F77 | .0658 | 15.20 | 249.2 | 600 | 2500 | 2500* | 172 |

* CONSULT FACTORY WITH TYPE APPLICATION

- CAST IRON THROUGHOUT
- PRESSURES TO 4000 PSI
- FLOWS TO 164 GPM
- HEAVY DUTY SLEEVE TYPE BEARINGS
- DOUBLE VITON® SHAFT SEALS STANDARD
- PRESSURE COMPENSATED THRUST PLATES
- DESIGNED FOR HEAVY DUTY APPLICATIONS
- SINGLE AND MULTI-STAGE CONFIGURATIONS
- VARIOUS SHAFT, FLANGE AND PORT OPTIONS
- PRECISION GEARS MACHINED FROM SOLID BAR STOCK
- COMPATIBLE WITH MOST FIRE RESISTANT FLUIDS
- CONTAMINANT RESISTANT
- COMPUTER DESIGNED AND MANUFACTURED
- QUALITY CERTIFIED
- FLEXIBLE DESIGN FOR NEW OR OEM REPLACEMENTS
- SERVICE SUPPORTED BY DEDICATION AND INVENTORY

P. O. BOX 2160, 1506 FULTON DR.
CORINTH, MISSISSIPPI 38835

Phone: 662/286-2252 Fax: 662/287-6580 E-mail: haisales@geartek.com Http: www.geartek.com

## SHAFT AVAILABLE

**2**

### 1 3/4"-13 TOOTH SPLINE

**SPLINE DATE**

| | |
|---|---|
| DIAMETRAL PITCH | 8/16 |
| PRESSURE ANGLE | 30° |
| NO. OF TEETH | 13 |
| MINOR DIA. | 1.471-1.453 |

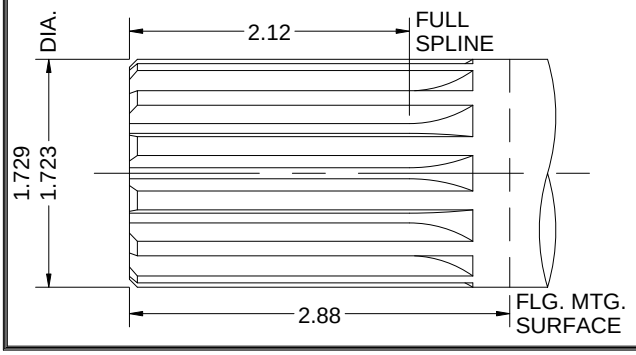


## PORT AVAILABLE

**3**

### SAE 4-BOLT CONNECTOR

3" SUCTION
1 1/2" DISCHARGE
OPTIONAL PORTS AVAILABLE

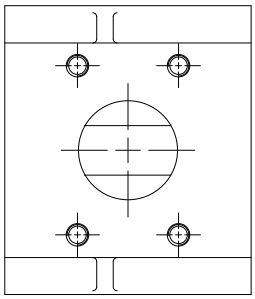

## FLANGE AVAILABLE

**D**

### SAE 'D' FLANGE

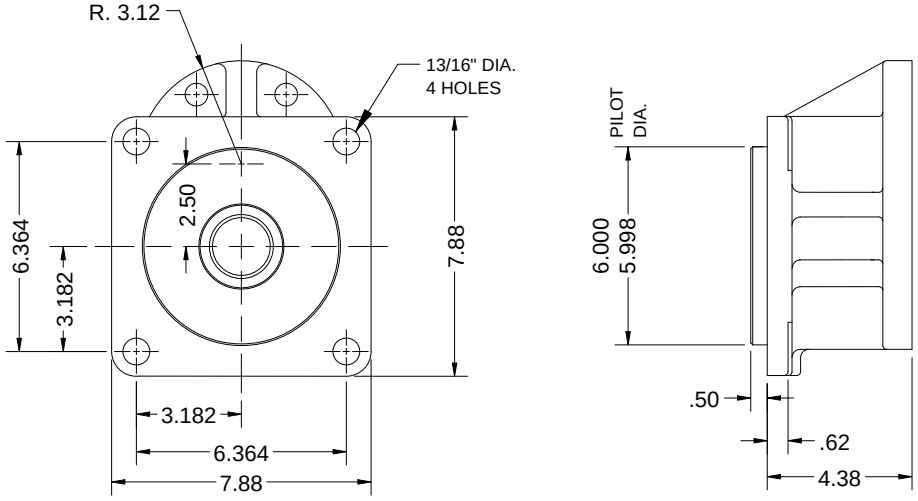


UNLESS OTHERWISE SPECIFIED, ALL LINEAR DIMENSIONS ARE IN INCHES.

# DIMENSIONAL DATA

SPECIAL MODELS AVAILABLE
IN TANDEM AND PIGGY BACK
CONSULT FACTORY

## MODEL EXAMPLE

**F 77 R - 2 D 3**

SERIES
SIZE
ROTATION
R=CLOCKWISE
L=COUNTERCLOCKWISE
SHAFT
FLANGE
PORTS *

* F77 AVAILABLE WITH 4" SAE
4-BOLT SUCTION AND 2" SAE
4-BOLT DISCHARGE PORT - CODE 4

F77 WITH 3" AND 1 1/2" PORTS
WILL BE ROTATED 90° FROM
PICTURE BELOW

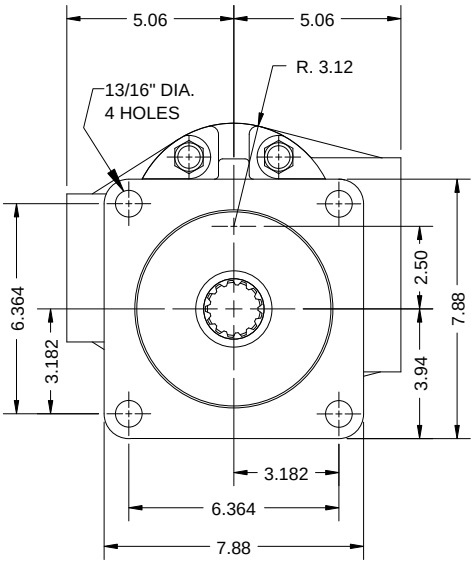


DRAWN FOR 'R' RIGHT HAND ROTATION

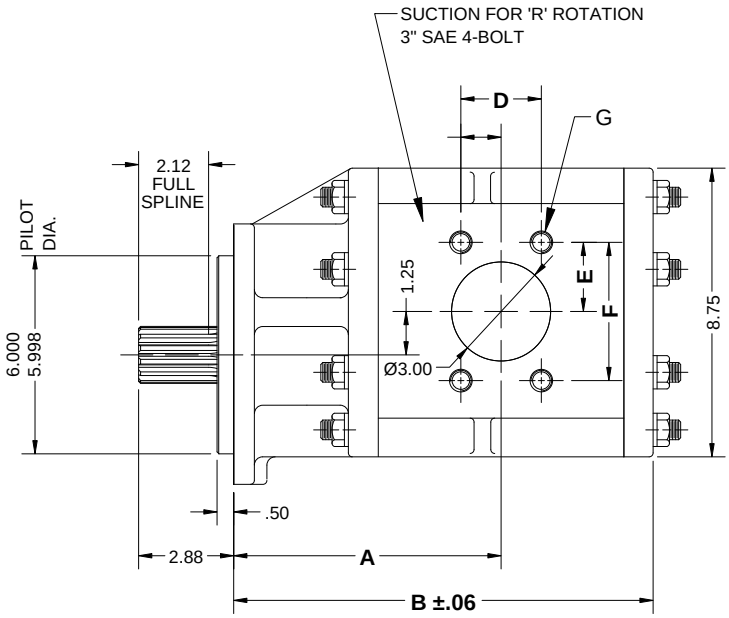


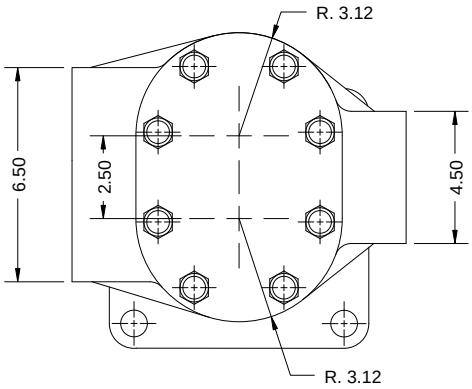


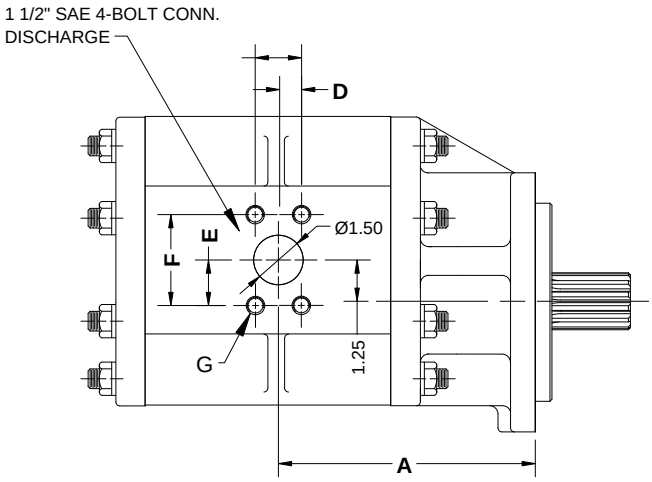


## MOUNTING DIMENSIONS

| SIZE | A | B |
|---|---|---|
| F45 | 6.68 | 11.38 |
| F50 | 6.90 | 11.61 |
| F55 | 7.13 | 11.83 |
| F66 | 7.66 | 12.36 |
| * F77 | 8.13 | 12.82 |

FOR METRIC DIMENSIONS
MULTIPLY 25.4 X IN. = mm

## 4-BOLT CONNECTOR CHART

| SIZE | C | D | E | F | G |
|---|---|---|---|---|---|
| 1 1/2" | .70 | 1.406 | 1.37 | 2.750 | 1/2-13NC |
| 3" | 1.21 | 2.438 | 2.09 | 4.188 | 5/8-11NC |

UNLESS OTHERWISE SPECIFIED, ALL LINEAR DIMENSIONS ARE IN INCHES.

# TYPICAL PERFORMANCE DATA

SAE 10W oil @ 150 DEGREES FAHRENHEIT
(150 SSU)

## 'F' SERIES TYPICAL PUMP FLOW @ 2500 PSI

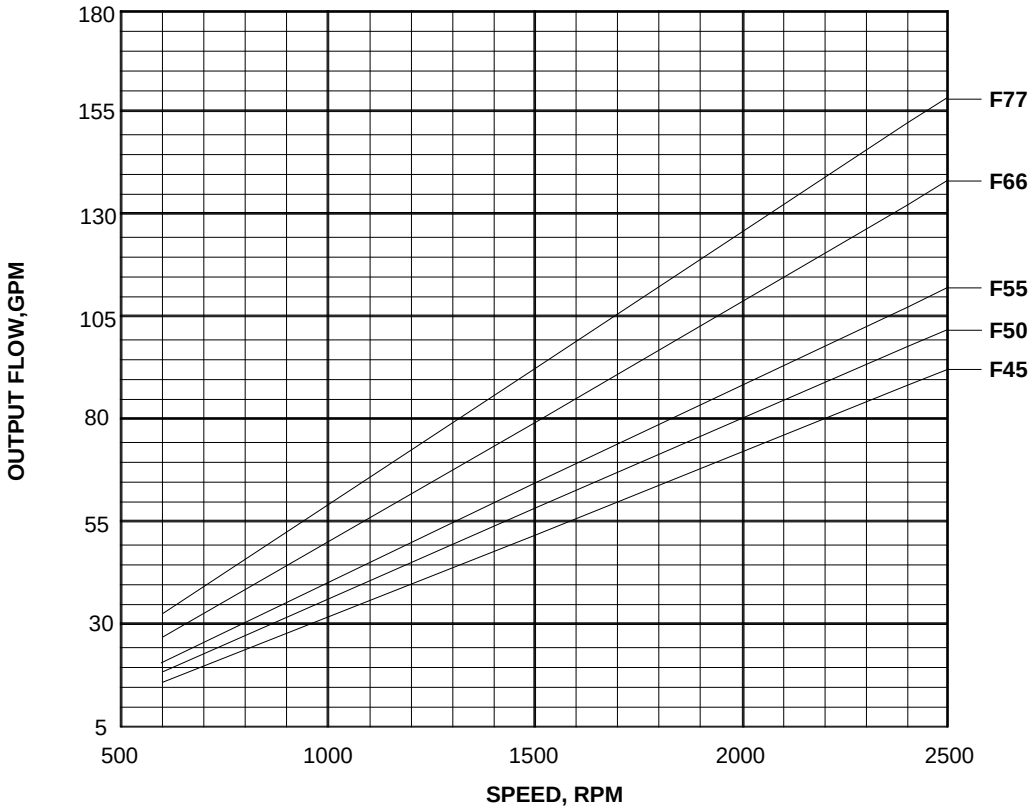


## 'F' SERIES PUMP HORSEPOWER IN @ 2500 PSI

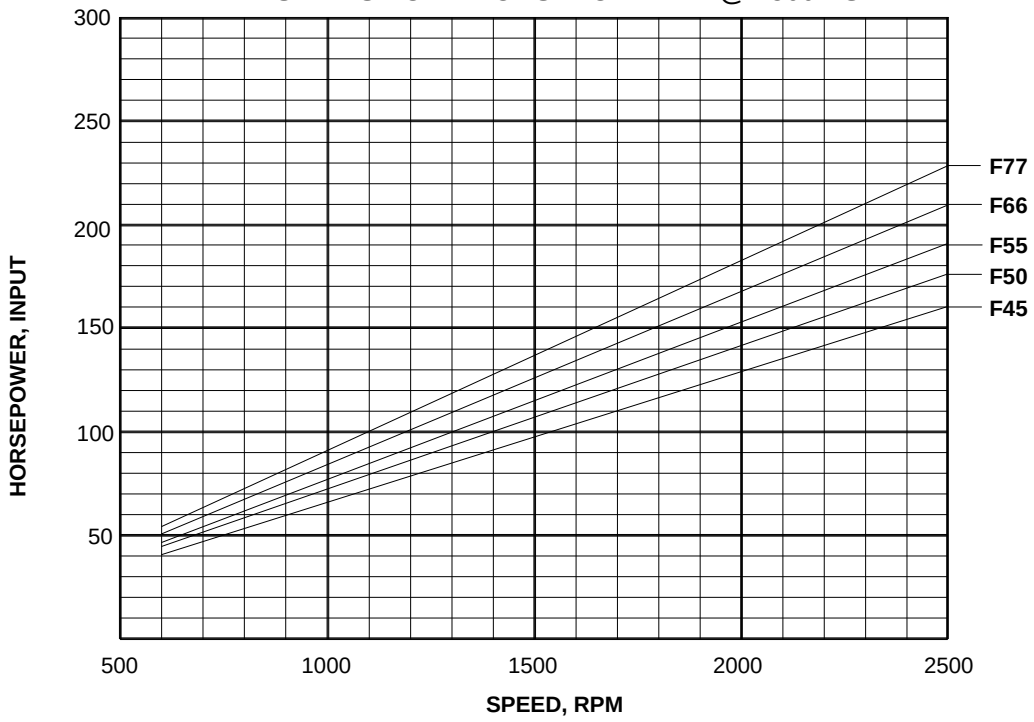


GEARTEK® FLUID POWER PUMPS AND MOTORS

**DIVISION OF HYDRAULIC ANALYSIS, INC.**