GEARTEK®

HYDRAULIC GEAR PUMPS AND MOTORS

# 'EB' Series

## *PIGGY-BACK*

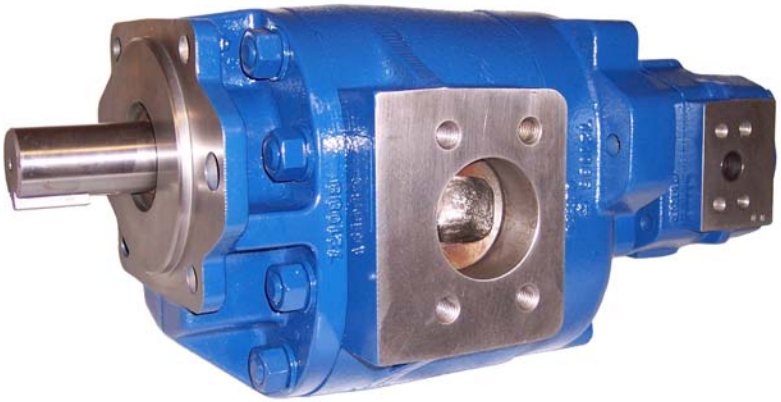

## Performance Data

| MODEL SIZE | DISPLACEMENT/REVOLUTION (THEORETICAL) | | | MINIMUM RPM | MAXIMUM RPM | MAXIMUM PRESSURE | |
|---|---|---|---|---|---|---|---|
| | U.S. GALLONS | CUBIC INCHES | CUBIC CENT. | | | PSI | BAR |
| EB30 | .0258 | 5.98 | 98.0 | 600 | 2500 | 4000 | 276 |
| EB35 | .0300 | 6.93 | 113.5 | 600 | 2500 | 4000 | 276 |
| EB40 | .0342 | 7.90 | 129.4 | 600 | 2500 | 4000* | 276 |
| EB45 | .0386 | 8.92 | 146.2 | 600 | 2500 | 4000* | 276 |
| EB50 | .0427 | 9.86 | 161.6 | 600 | 2500 | 3800* | 262 |
| EB55 | .0470 | 10.86 | 178.0 | 600 | 2500 | 3400* | 234 |
| EB66 | .0570 | 13.17 | 215.9 | 600 | 2500 | 2900* | 200 |
| EB77 | .0658 | 15.20 | 249.2 | 600 | 2500 | 2500* | 172 |
| EB95 | .0818 | 18.91 | 309.8 | 600 | 2500 | 2000* | 138 |

* CONSULT FACTORY WITH TYPE APPLICATION

- CAST IRON THROUGHOUT
- PRESSURES TO 4000 PSI
- FLOWS TO 204 GPM
- HEAVY DUTY SLEEVE TYPE BEARINGS
- DOUBLE VITON® SHAFT SEALS STANDARD
- PRESSURE COMPENSATED THRUST PLATES
- DESIGNED FOR HEAVY DUTY APPLICATIONS
- SINGLE AND MULTI-STAGE CONFIGURATIONS
- VARIOUS SHAFT, FLANGE AND PORT OPTIONS
- PRECISION GEARS MACHINED FROM SOLID BAR STOCK
- COMPATIBLE WITH MOST FIRE RESISTANT FLUIDS
- CONTAMINANT RESISTANT
- COMPUTER DESIGNED AND MANUFACTURED
- QUALITY CERTIFIED
- FLEXIBLE DESIGN FOR NEW OR OEM REPLACEMENTS
- SERVICE SUPPORTED BY DEDICATION AND INVENTORY

P. O. BOX 2160, 1506 FULTON DR.
CORINTH, MISSISSIPPI 38835

Phone: 662/286-2252 Fax: 662/287-6580 E-mail: haisales@geartek.com Http: www.geartek.com

## SHAFTS AVAILABLE

**1**

### 1 1/4"-14 TOOTH SPLINE

**TORQUE LIMIT 650 FT.-LBS.**

**SPLINE DATE**

| | |
|---|---|
| DIAMETRAL PITCH | 12/24 |
| PRESSURE ANGLE | 30° |
| NO. OF TEETH | 14 |
| MINOR DIA. | 1.062-1.050 |

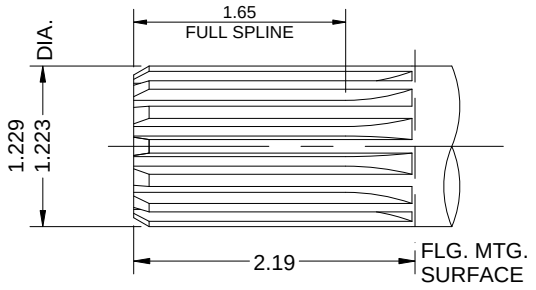


**7**

**8**

### 1 1/2" STRAIGHT

**E55 & E77 ONLY**

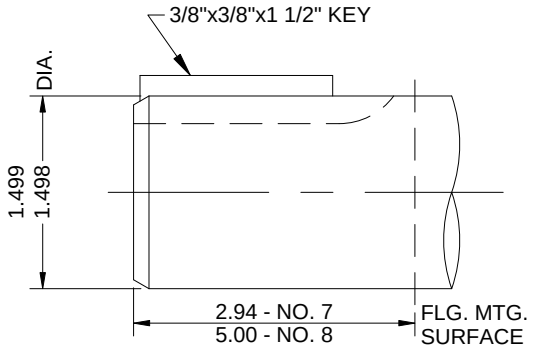


**6**

### 1 1/2"-17 TOOTH SPLINE

**SPLINE DATE**

| | |
|---|---|
| DIAMETRAL PITCH | 12/24 |
| PRESSURE ANGLE | 30° |
| NO. OF TEETH | 17 |
| MINOR DIA. | 1.290-1.300 |

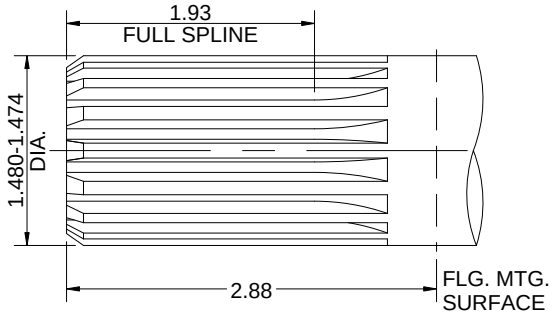


**9**

### 1 1/2"-14 TOOTH SPLINE

**SPLINE DATE**

| | |
|---|---|
| DIAMETRAL PITCH | 10/20 |
| PRESSURE ANGLE | 30° |
| NO. OF TEETH | 14 |
| MINOR DIA. | 1.264-1.276 |

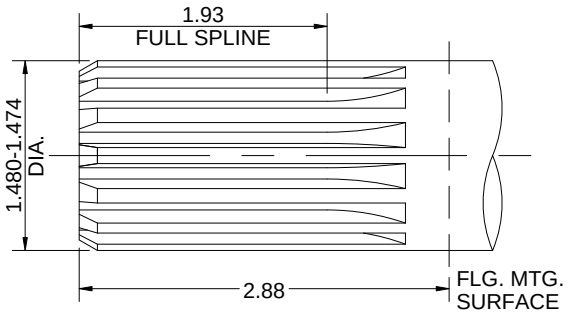


## STANDARD SAE 4-BOLT CONNECTOR PORTS

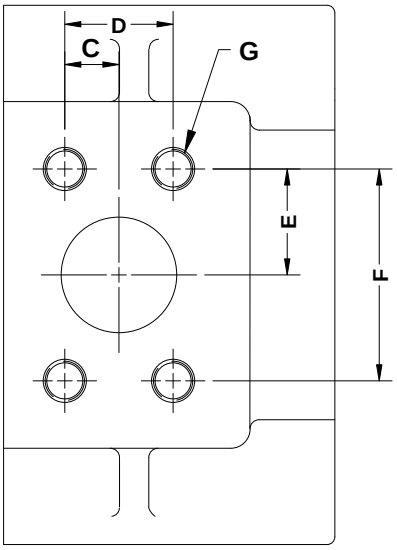


**SAE 4-BOLT CONN. PORTS**

| SIZE | INLET SIZE | OUTLET SIZE |
|---|---|---|
| E30 | 2 1/2" | 1 1/4" |
| E35 | 2 1/2" | 1 1/4" |
| E40 | 2 1/2" | 1 1/4" |
| E45 | 2 1/2" | 1 1/4" |
| E50 | 2 1/2" | 1 1/2" |
| E55 | 2 1/2" | 1 1/2" |
| E66 | 2 1/2" | 1 1/2" |
| E77 | 2 1/2" | 1 1/2" |
| E95 | 3" | 2" |

**4-BOLT CONNECTOR CHART**

| SIZE | C | D | E | F | G |
|---|---|---|---|---|---|
| 1 1/4" | .59 | 1.188 | 1.15 | 2.313 | 7/16-14NC |
| 1 1/2" | .70 | 1.406 | 1.37 | 2.750 | 1/2-13NC |
| 2" | .84 | 1.688 | 1.53 | 3.062 | 1/2-13NC |
| 2 1/2" | 1.00 | 2.000 | 1.75 | 3.500 | 1/2-13NC |
| 3" | 1.21 | 2.438 | 2.09 | 4.188 | 5/8-11NC |

UNLESS OTHERWISE SPECIFIED, ALL LINEAR DIMENSIONS ARE IN INCHES.

## FLANGES AVAILABLE

**C**

### SAE 2X4 BOLT 'C' FLANGE

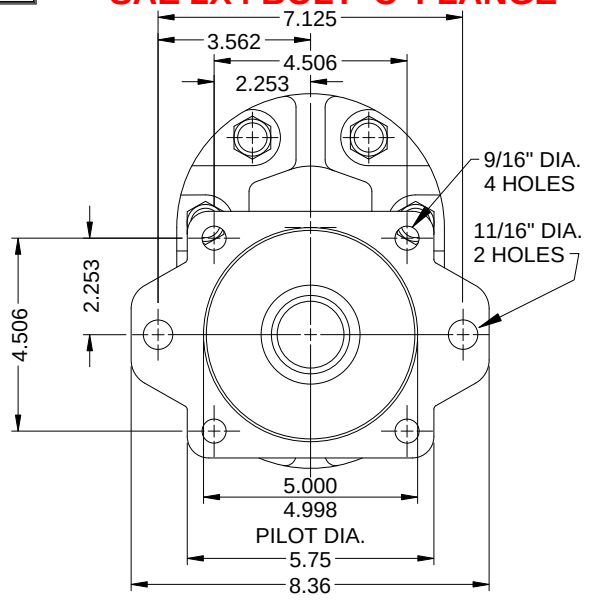


## REAR ADAPTERS AVAILABLE

**C**

### SAE 'C' ADAPTER REAR

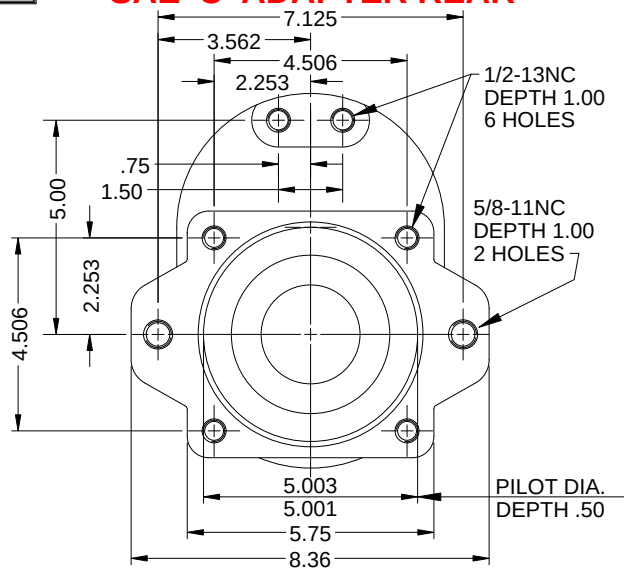


**B**

### SAE 'B' ADAPTER REAR

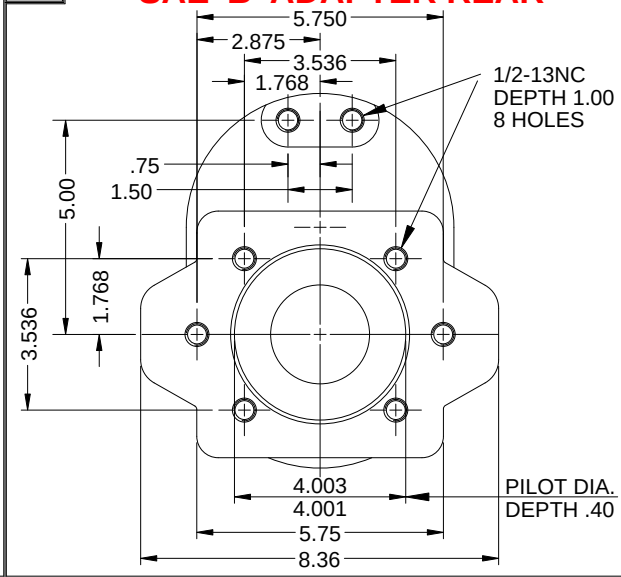


## REAR COUPLINGS AVAILABLE

**125**

### 1 1/4"-14 TOOTH INTERNAL SPLINE

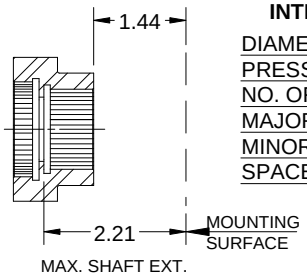


**INTERNAL SPLINE DATE**

| | |
|---|---|
| DIAMETRAL PITCH | 12/24 |
| PRESSURE ANGLE | 30° |
| NO. OF TEETH | 14 |
| MAJOR DIA. | 1.253-1.258 |
| MINOR DIA. | 1.086-1.091 |
| SPACE WIDTH | .1338-.1308 |

**78**

### 7/8"-13 TOOTH INTERNAL SPLINE

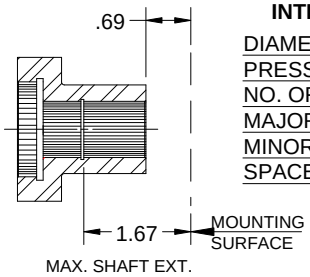


**INTERNAL SPLINE DATE**

| | |
|---|---|
| DIAMETRAL PITCH | 16/32 |
| PRESSURE ANGLE | 30° |
| NO. OF TEETH | 13 |
| MAJOR DIA. | .901-.906 |
| MINOR DIA. | .754-.759 |
| SPACE WIDTH | .1008-.1035 |

UNLESS OTHERWISE SPECIFIED, ALL LINEAR DIMENSIONS ARE IN INCHES.

# DIMENSIONAL DATA

## MODEL EXAMPLE

**EB 55 R - 1 C - C 125 -**

- EB: SERIES
- 55: SIZE
- R: ROTATION R=CLOCKWISE L=COUNTERCLOCKWISE
- 1: SHAFT
- C: FLANGE
- C: ADAPTER REAR MOUNT
- 125: COUPLING
- -: REAR PUMP AS REQUIRED

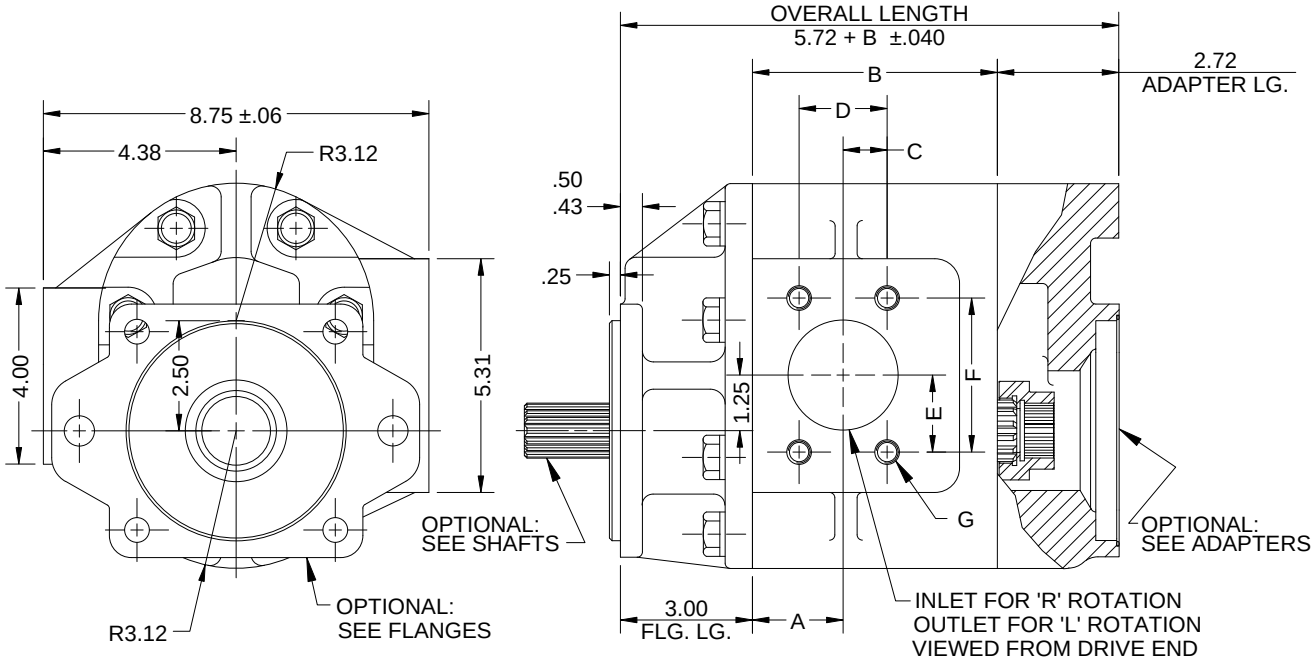


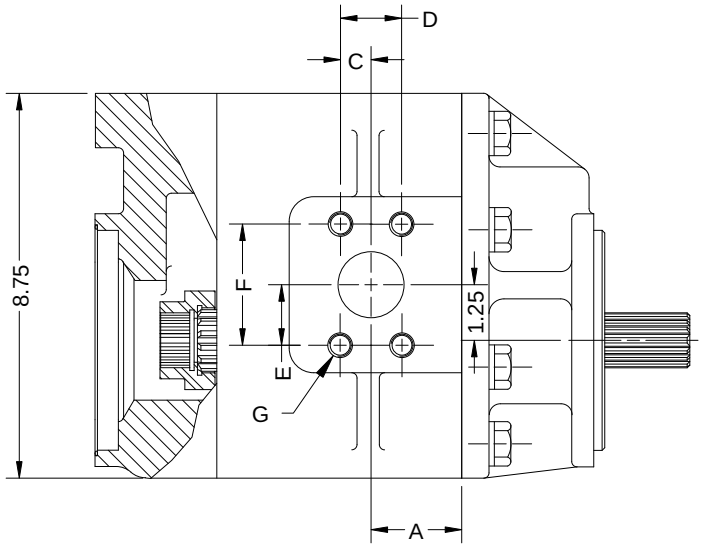


| MOUNTING DIMENSIONS | | |
|---|---|---|
| SIZE | A | B |
| E30 | 1.75 | 4.33 |
| E35 | 1.92 | 4.51 |
| E40 | 2.09 | 4.68 |
| E45 | 2.28 | 4.87 |
| E50 | 2.45 | 5.04 |
| E55 | 2.63 | 5.22 |
| E66 | 3.05 | 5.64 |
| E77 | 3.42 | 6.01 |
| E95 | 3.00 | 6.68 |

FOR METRIC DIMENSIONS
MULTIPLY 25.4 X IN. = mm

UNLESS OTHERWISE SPECIFIED, ALL LINEAR DIMENSIONS ARE IN INCHES.

# TYPICAL PERFORMANCE DATA

SAE 10W OIL @ 150° (150 SSU)

## 'E' SERIES TYPICAL PUMP FLOW @ 2500 PSI

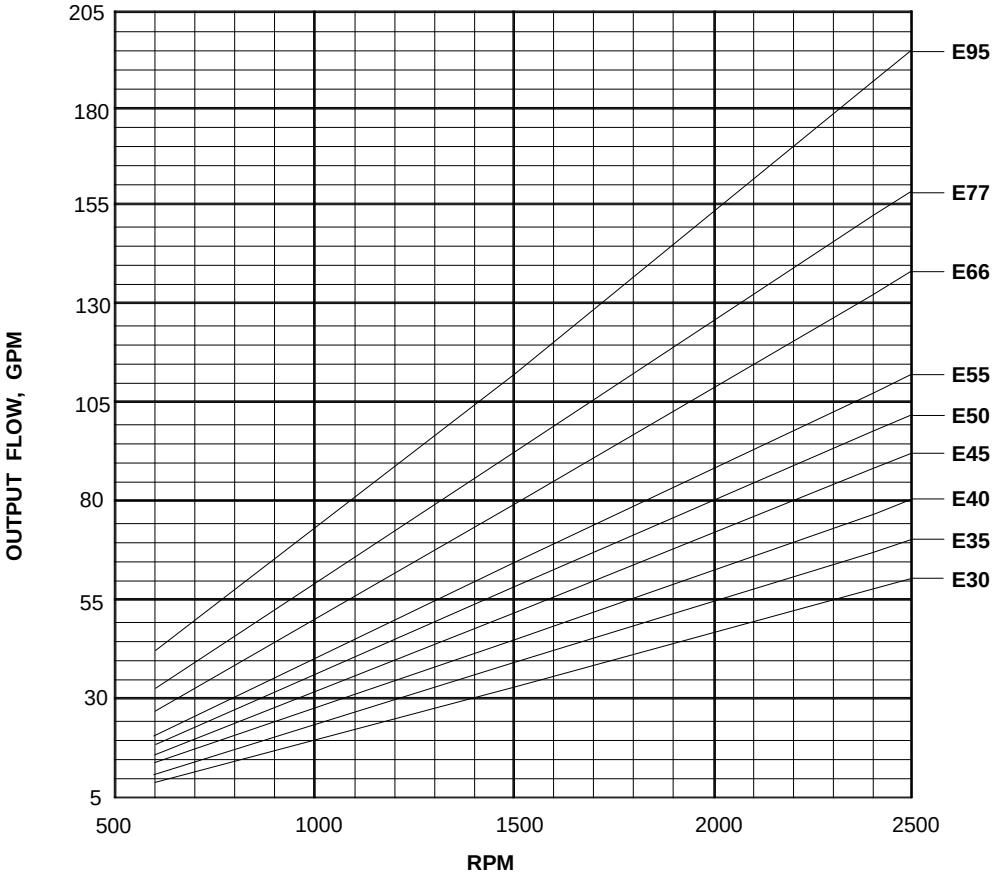


## 'E' SERIES PUMP HORSEPOWER IN @ 2500 PSI

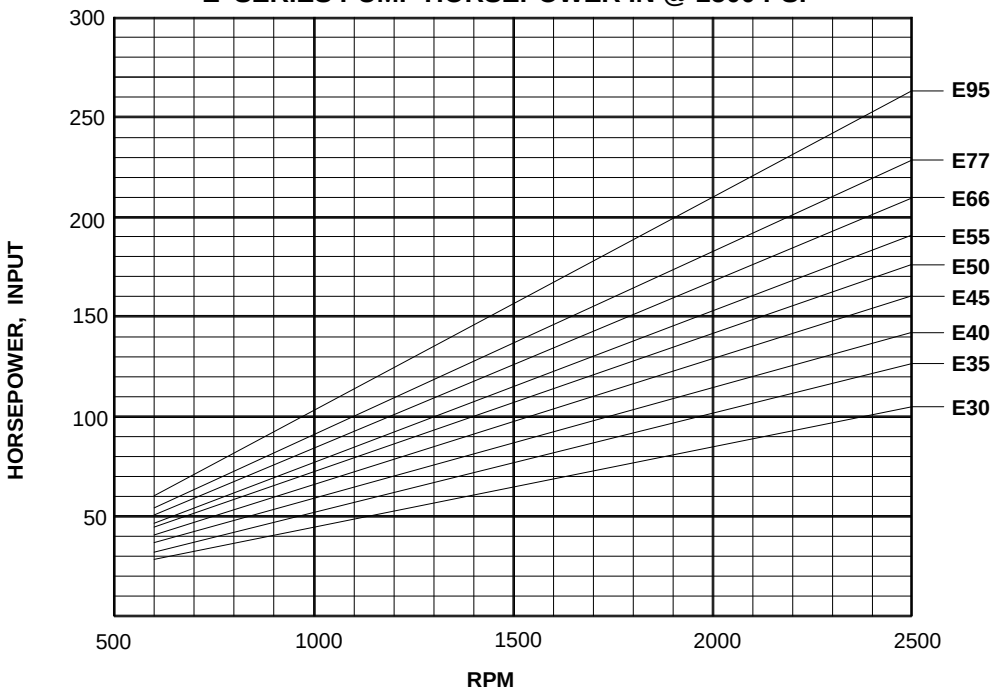


GEARTEK® FLUID POWER PUMPS AND MOTORS

**DIVISION OF HYDRAULIC ANALYSIS, INC.**