GEARTEK®

HYDRAULIC GEAR PUMPS AND MOTORS

# 'E' Series

## SINGLE PUMP

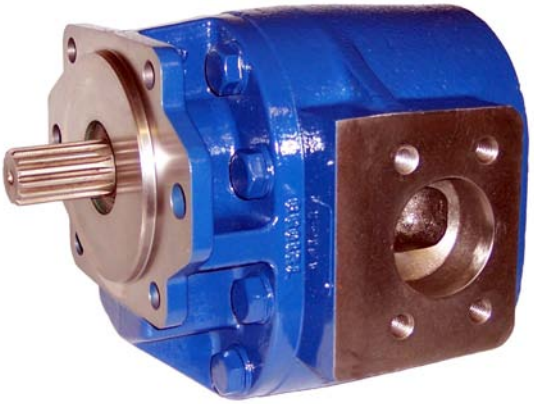

## Performance Data

| MODEL SIZE | DISPLACEMENT/REVOLUTION (THEORETICAL) | | | MAXIMUM PRESSURE | | MINIMUM RPM | MAXIMUM RPM |
|---|---|---|---|---|---|---|---|
| | U.S. GALLONS | CUBIC INCHES | CUBIC CENT. | PSI | BAR | | |
| E30 | .0258 | 5.98 | 98.0 | 4000 | 276 | 600 | 2500 |
| E35 | .0300 | 6.93 | 113.5 | 4000 | 276 | 600 | 2500 |
| E40 | .0342 | 7.90 | 129.4 | 4000* | 276 | 600 | 2500 |
| E45 | .0386 | 8.92 | 146.2 | 4000* | 276 | 600 | 2500 |
| E50 | .0427 | 9.86 | 161.6 | 3800* | 262 | 600 | 2500 |
| E55 | .0470 | 10.86 | 178.0 | 3400* | 234 | 600 | 2500 |
| E66 | .0570 | 13.17 | 215.6 | 2900* | 200 | 600 | 2500 |
| E77 | .0658 | 15.20 | 249.2 | 2500* | 172 | 600 | 2500 |
| E95 | .0818 | 18.91 | 309.8 | 2000* | 138 | 600 | 2500 |

* CONSULT FACTORY WITH TYPE APPLICATION

- CAST IRON THROUGHOUT
- PRESSURES TO 4000 PSI
- FLOWS TO 204 GPM
- HEAVY DUTY SLEEVE TYPE BEARINGS
- DOUBLE VITON® SHAFT SEALS STANDARD
- PRESSURE COMPENSATED THRUST PLATES
- DESIGNED FOR HEAVY DUTY APPLICATIONS
- SINGLE AND MULTI-STAGE CONFIGURATIONS
- VARIOUS SHAFT, FLANGE AND PORT OPTIONS
- PRECISION GEARS MACHINED FROM SOLID BAR STOCK
- COMPATIBLE WITH MOST FIRE RESISTANT FLUIDS
- CONTAMINANT RESISTANT
- COMPUTER DESIGNED AND MANUFACTURED
- QUALITY CERTIFIED
- FLEXIBLE DESIGN FOR NEW OR OEM REPLACEMENTS
- SERVICE SUPPORTED BY DEDICATION AND INVENTORY

P. O. BOX 2160, 1506 FULTON DR.
CORINTH, MISSISSIPPI 38835

Phone: 662/286-2252 Fax: 662/287-6580 E-mail: haisales@geartek.com Http: www.geartek.com

## SHAFTS AVAILABLE

1

### 1 1/4"-14 TOOTH SPLINE

**TORQUE LIMIT 650 FT.-LBS.**

**SPLINE DATE**

| | |
|---|---|
| DIAMETRAL PITCH | 12/24 |
| PRESSURE ANGLE | 30° |
| NO. OF TEETH | 14 |
| MINOR DIA. | 1.062-1.050 |

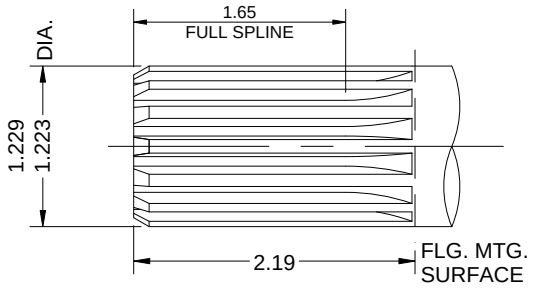


2

5

### 1 1/4" STRAIGHT

**TORQUE LIMIT 650 FT.-LBS.**

**E55, E66, E77 & E95 ONLY**

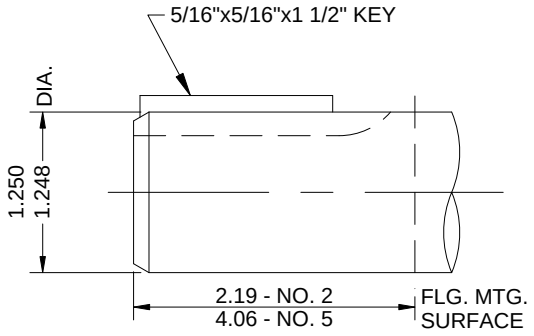


## STANDARD SAE 4-BOLT CONNECTOR PORTS

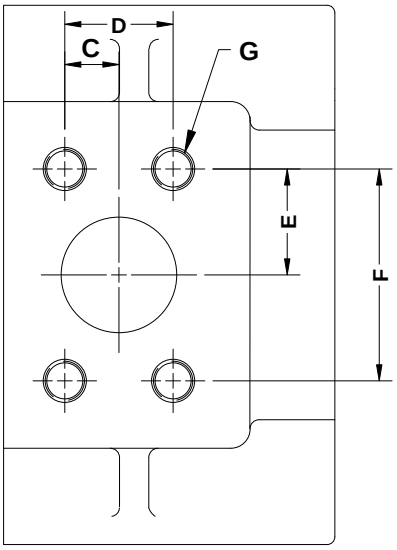


**SAE 4-BOLT CONN. PORTS**

| SIZE | INLET SIZE | OUTLET SIZE |
|---|---|---|
| E30 | 2 1/2" | 1 1/4" |
| E35 | 2 1/2" | 1 1/4" |
| E40 | 2 1/2" | 1 1/4" |
| E45 | 2 1/2" | 1 1/4" |
| E50 | 2 1/2" | 1 1/2" |
| E55 | 2 1/2" | 1 1/2" |
| E66 | 2 1/2" | 1 1/2" |
| E77 | 2 1/2" | 1 1/2" |
| E95 | 3" | 2" |

**4-BOLT CONNECTOR CHART**

| SIZE | C | D | E | F | G |
|---|---|---|---|---|---|
| 1 1/4" | .59 | 1.188 | 1.15 | 2.313 | 7/16-14NC |
| 1 1/2" | .70 | 1.406 | 1.37 | 2.750 | 1/2-13NC |
| 2" | .84 | 1.688 | 1.53 | 3.062 | 1/2-13NC |
| 2 1/2" | 1.00 | 2.000 | 1.75 | 3.500 | 1/2-13NC |
| 3" | 1.21 | 2.438 | 2.09 | 4.188 | 5/8-11NC |

UNLESS OTHERWISE SPECIFIED, ALL LINEAR DIMENSIONS ARE IN INCHES.

## FLANGES AVAILABLE

**C**

### SAE 2X4 BOLT 'C' FLANGE

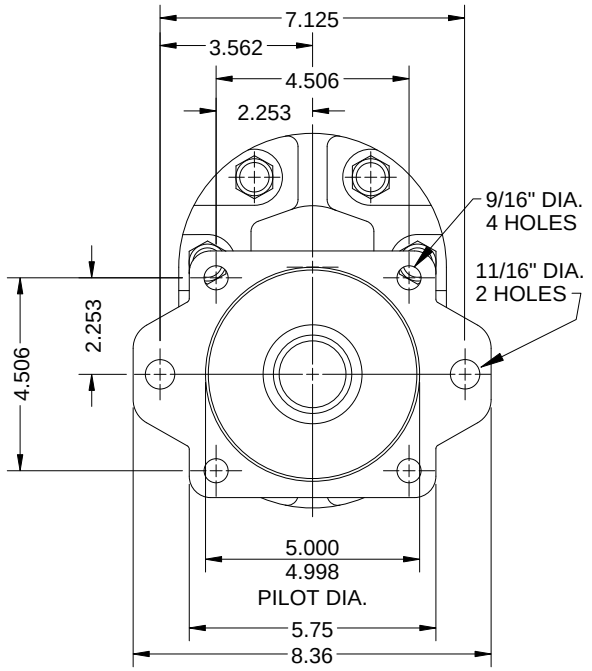


## DIMENSIONAL DATA

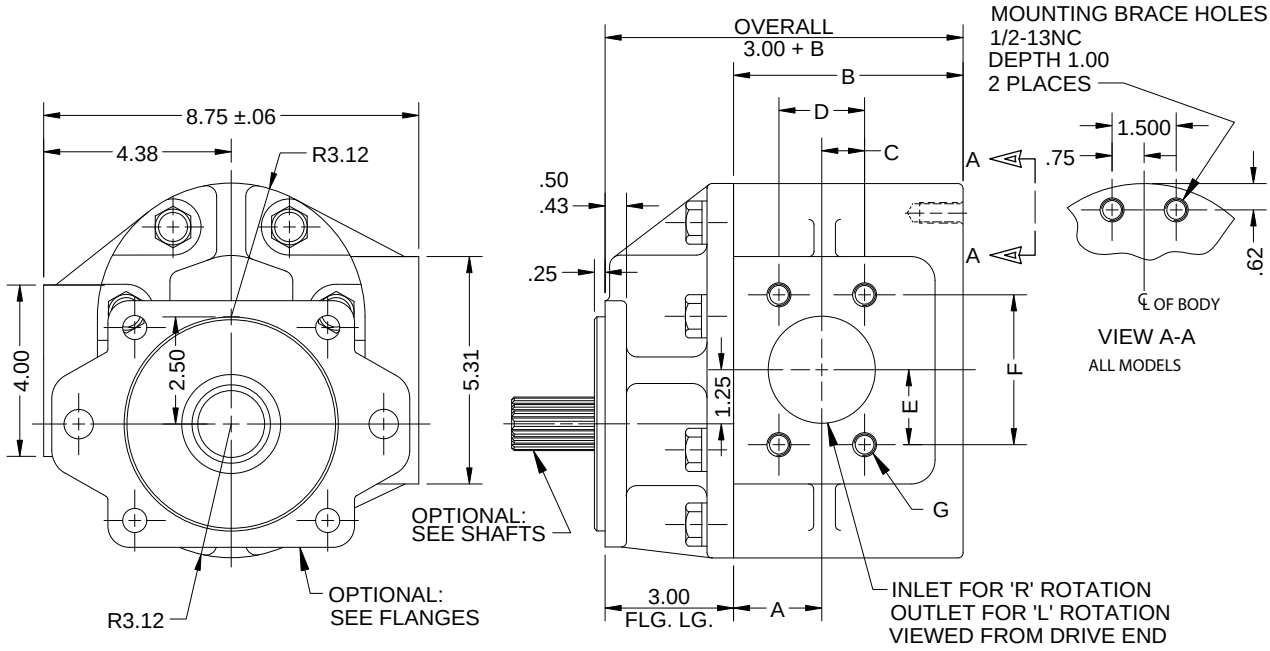


**MOUNTING DIMENSIONS**

| SIZE | A | B |
|---|---|---|
| E30 | 1.75 | 4.92 |
| E35 | 1.92 | 5.10 |
| E40 | 2.09 | 5.27 |
| E45 | 2.28 | 5.46 |
| E50 | 2.45 | 5.63 |
| E55 | 2.63 | 5.81 |
| E66 | 3.05 | 6.23 |
| E77 | 3.42 | 6.60 |
| E95 | 3.00 | 7.27 |

FOR METRIC DIMENSIONS
MULTIPLY 25.4 X IN. = mm

OTHER PORT TYPES AVAILABLE
CONSULT FACTORY

## MODEL EXAMPLE

**E 30 R - 1 C**

- E — SERIES
- 30 — SIZE
- R — ROTATION R=CLOCKWISE L=COUNTERWISE
- 1 — SHAFT
- C — FLANGE

UNLESS OTHERWISE SPECIFIED, ALL LINEAR DIMENSIONS ARE IN INCHES.

# TYPICAL PERFORMANCE DATA

SAE 10W OIL @ 150° (150 SSU)

## 'E' SERIES TYPICAL PUMP FLOW @ 2500 PSI

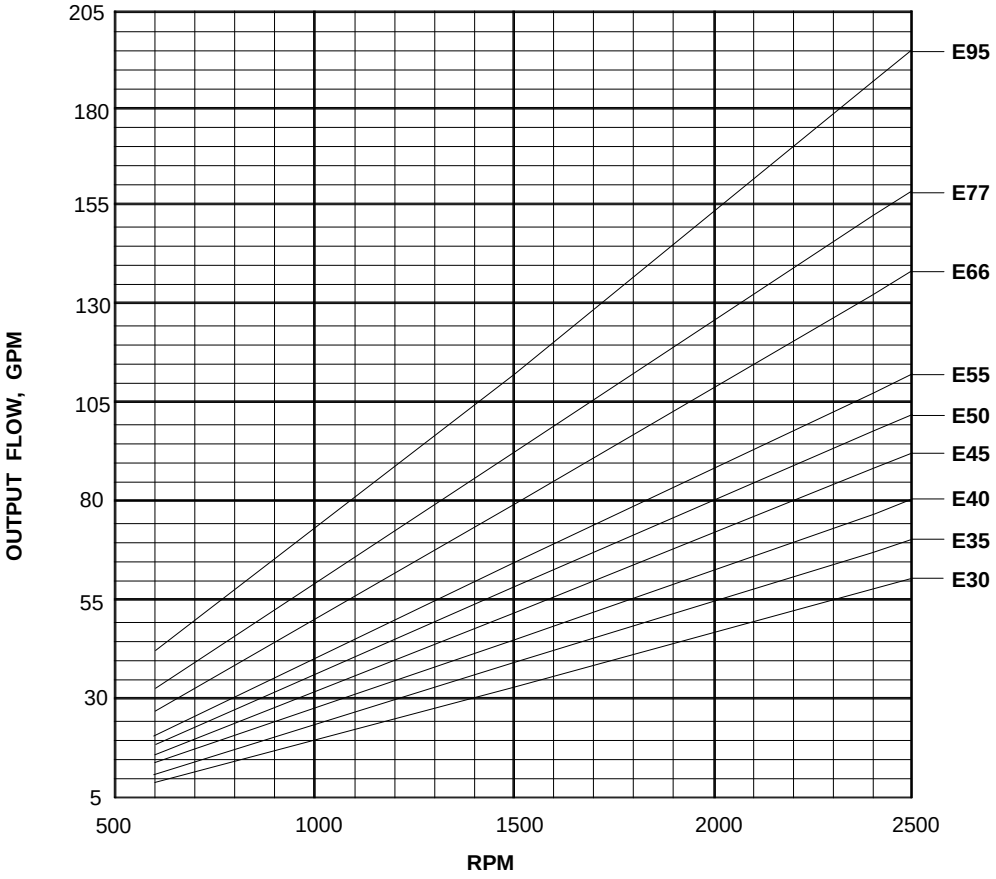


## 'E' SERIES PUMP HORSEPOWER IN @ 2500 PSI

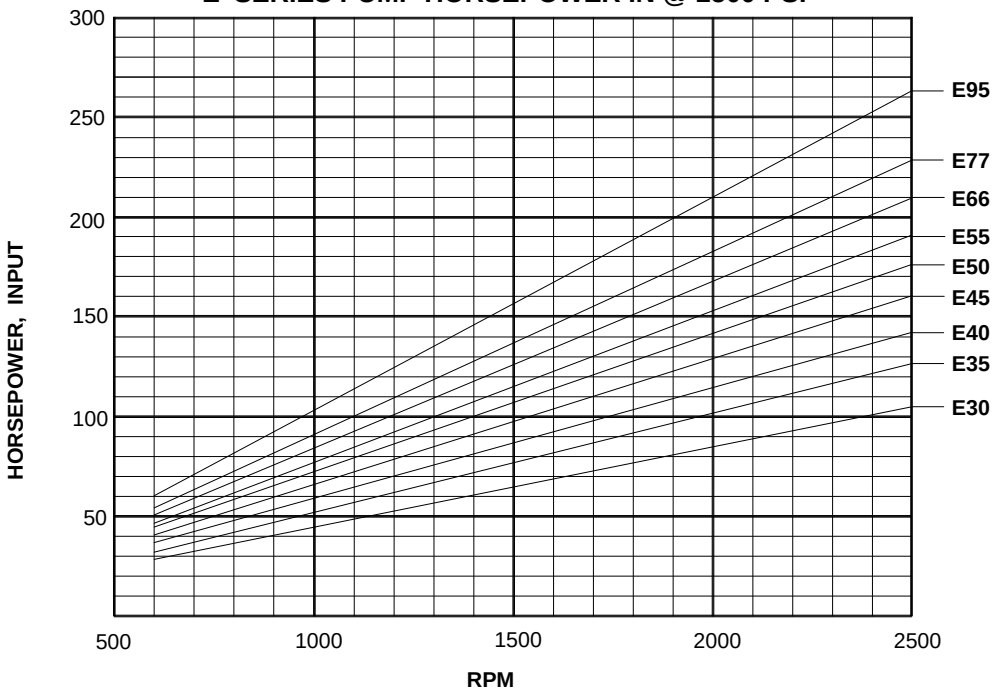


GEARTEK® FLUID POWER PUMPS AND MOTORS

**DIVISION OF HYDRAULIC ANALYSIS, INC.**