GEARTEK®

HYDRAULIC GEAR PUMPS AND MOTORS

# 'SLD' & 'SED' Series

## UNLOADING VALVES

The 'SLD' & 'SED' Series limits the hydraulic horsepower which in turn limits the horsepower required from the prime mover.

Both units can supply flow from either both sections of the tandem pump, or from only the front section of the unit.

With the 'SLD', when the operating pressure exceeds a predetermined setting, an integral pilot operated relief valve opens which moves the spool and redirects the rear section flow from the common discharge to the common suction.

Once the system pressure is reduced to the same predetermined setting, the flow from the rear section reverts back to the common discharge.

The SED model allows flow through both sections until an external 12V or 24V DC electrical signal actuates a solenoid valve to divert flow in the rear section similar to the SLD. The pump resets to both sections when the electrical signal is turned off.

Both models can be manually unloaded independently of the pilot valve or solenoid.

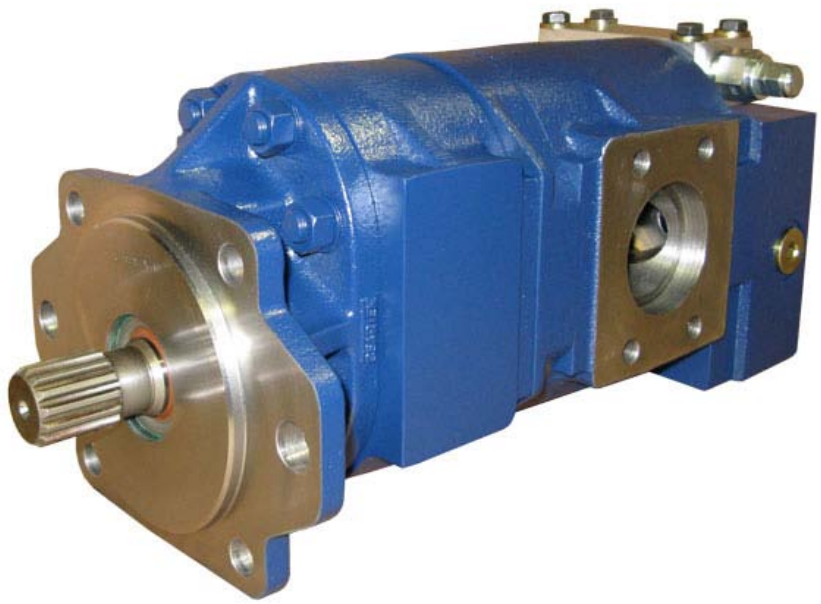

## Performance Data

| MODEL SIZE | DISPLACEMENT/REVOLUTION (THEORETICAL) | | | PRESSURE RATINGS | | | | MAXIMUM SPEED (RPM) |
|---|---|---|---|---|---|---|---|---|
| | | | | NORMAL DUTY | | SEVERE DUTY | | |
| | U.S. GALLONS | CUBIC INCHES | CUBIC CENT. | PSI | BAR | PSI | BAR | |
| D15 | .0129 | 2.98 | 48.8 | 4000 | 276 | 3800 | 262 | 2500 |
| D20 | .0172 | 3.97 | 65.1 | 3800 | 262 | 3000 | 207 | 2500 |
| D25 | .0215 | 4.97 | 81.4 | 3000 | 207 | 2300 | 159 | 2500 |
| D30 | .0258 | 5.96 | 97.6 | 2500 | 172 | 2000 | 138 | 2400 |
| D35 | .0301 | 6.95 | 113.9 | 2500* | 172 | 2000* | 138 | 2300 |
| D40 | .0344 | 7.95 | 130.2 | 2500* | 172 | 2000* | 138 | 2000 |
| D45 | .0387 | 8.94 | 146.5 | 2500* | 172 | 2000* | 138 | 1800 |

* CONSULT FACTORY WITH TYPE APPLICATION
PRESSURES MAY BE LIMITED TO SHAFT TYPE

- CAST IRON THROUGHOUT
- PRESSURES TO 4000 PSI
- FLOWS TO 140 GPM
- HEAVY DUTY SLEEVE TYPE BEARINGS
- HIGH PRESSURE VITON® SHAFT SEALS
- PRESSURE COMPENSATED THRUST PLATES
- DESIGNED FOR HEAVY DUTY APPLICATIONS
- VARIOUS SHAFT, FLANGE AND PORT OPTIONS
- PRECISION GEARS MACHINED FROM SOLID BAR STOCK
- COMPATIBLE WITH MOST FIRE RESISTANT FLUIDS
- CONTAMINANT RESISTANT
- COMPUTER DESIGNED AND MANUFACTURED
- FLEXIBLE DESIGN FOR NEW OR OEM REPLACEMENTS
- SERVICE SUPPORTED BY DEDICATION AND INVENTORY

P. O. BOX 2160, 1506 FULTON DR.
CORINTH, MISSISSIPPI 38835

Phone: 662/286-2252 Fax: 662/287-6580 E-mail: haisales@geartek.com Http: www.geartek.com

## SHAFTS AVAILABLE

### 1 — 1 1/4"-14 TOOTH SPLINE

**SPLINE DATE**

| | |
|---|---|
| DIAMETRAL PITCH | 12/24 |
| PRESSURE ANGLE | 30° |
| NO. OF TEETH | 14 |
| MINOR DIA. | 1.062-1.050 |

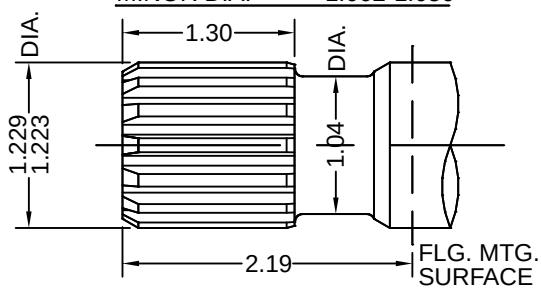


### 3 — 1 1/4" STRAIGHT

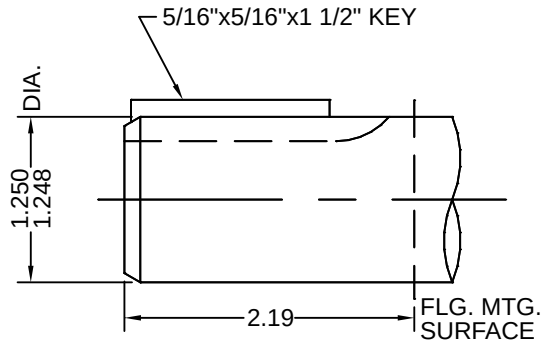


## FLANGES AVAILABLE

### B — SAE 2X4 BOLT 'B' FLANGE

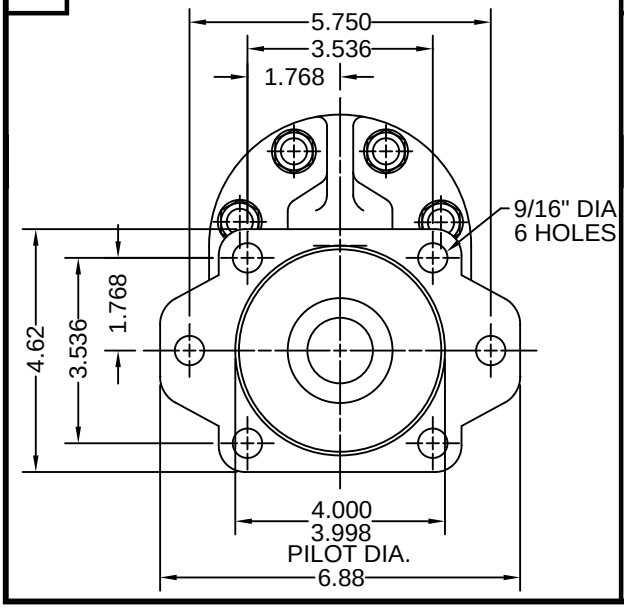


### C — SAE 2X4 BOLT 'C' FLANGE

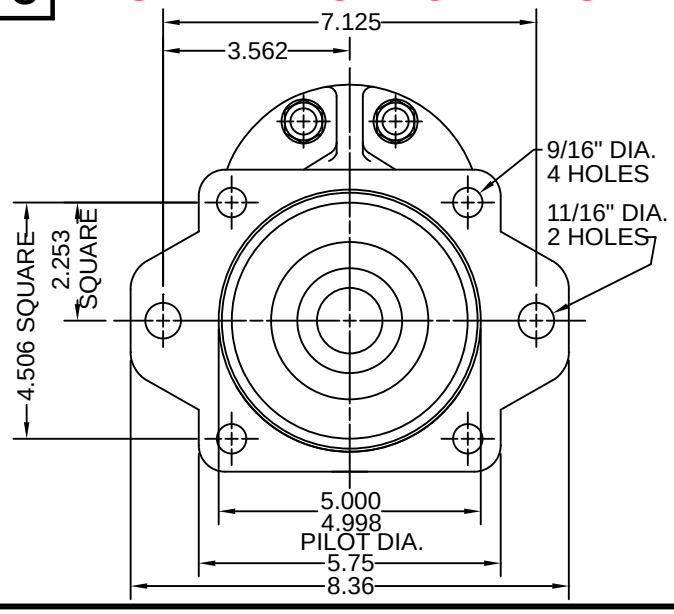


## STANDARD SAE 4-BOLT CONNECTOR PORTS

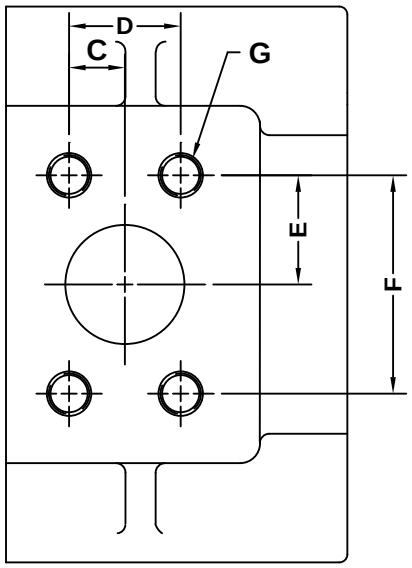


**SAE 4-BOLT CONN. PORTS**

| SIZE | INLET SIZE REAR SECTION | OUTLET SIZE FRONT SECTION |
|---|---|---|
| D15 | 1 1/2" | 1 1/4" |
| D20 | 2" | 1 1/2" |
| D25 | 2" | 1 1/2" |
| D30 | 2" | 1 1/2" |
| D35 | 2 1/2" | 1 1/2" |
| D40 | 2 1/2" | 1 1/2" |
| D45 | 2 1/2" | 1 1/2" |

**4-BOLT CONNECTOR CHART**

| SIZE | C | D | E | F | G |
|---|---|---|---|---|---|
| 1 1/4" | .59 | 1.188 | 1.15 | 2.313 | 7/16-14NC |
| 1 1/2" | .70 | 1.406 | 1.37 | 2.750 | 1/2-13NC |
| 2" | .84 | 1.688 | 1.53 | 3.062 | 1/2-13NC |
| 2 1/2" | 1.00 | 2.000 | 1.75 | 3.500 | 1/2-13NC |

UNLESS OTHERWISE SPECIFIED, ALL LINEAR DIMENSIONS ARE IN INCHES.

# DIMENSIONAL DATA

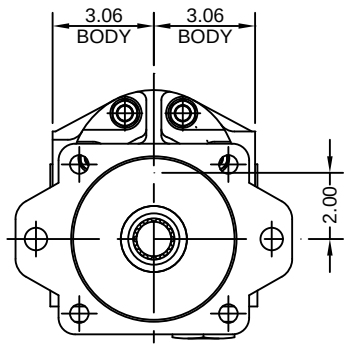


DRAWN FOR 'R' ROTATION

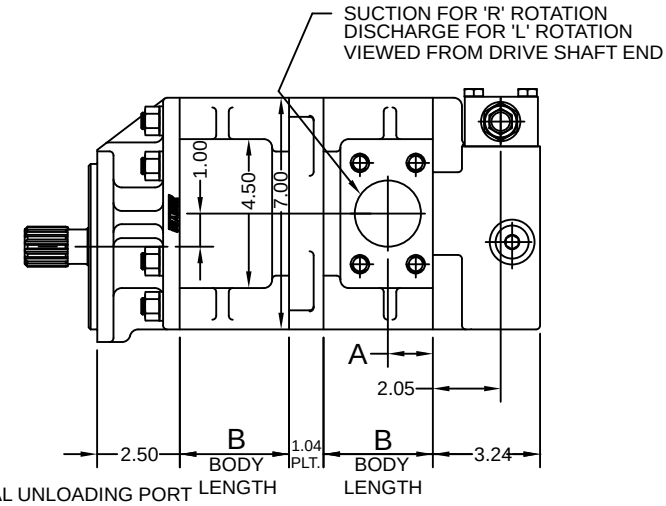


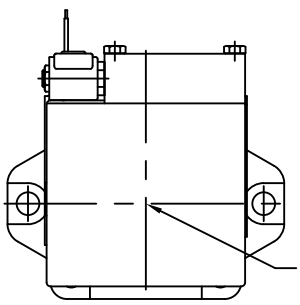

REAR VIEW
SHOWN FOR SED

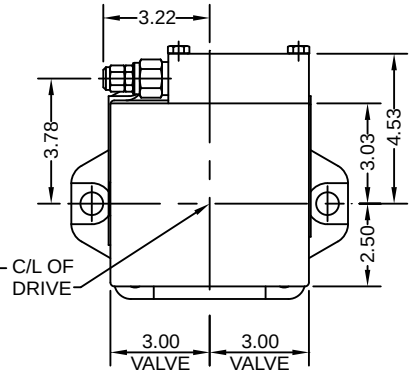


REAR VIEW
SHOWN FOR SLD

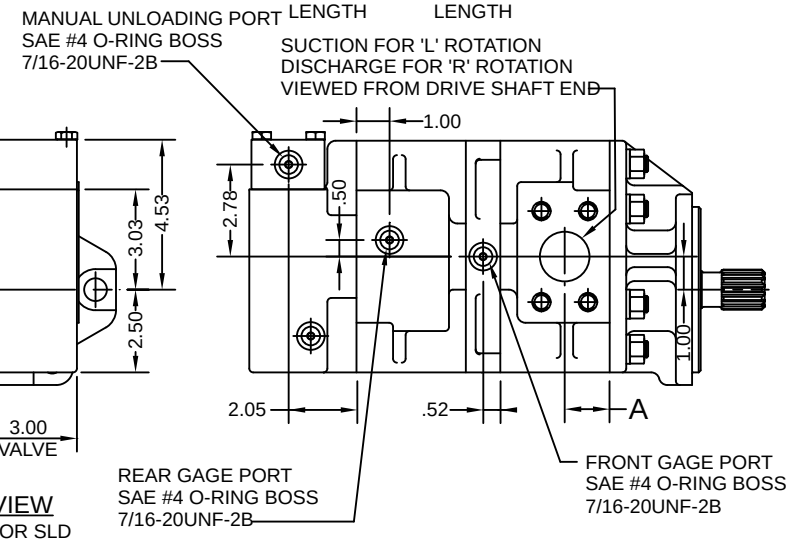


## MODEL EXAMPLE

SL D 25 - 25 L - 1 C - 18

- PRESSURE UNLOADING PUMP
- SERIES
- SECTION SIZES
  NOTE: FOR STANDARD PORTS REAR SECTION MUST BE EQUAL TO OR LARGER THAN FRONT SECTION
- ROTATION
- DRIVE SHAFT
- FLANGE
- PRESSURE SETTING
  CODE EXAMPLES:
  01 = 100 PSI
  30 = 3000 PSI

## MODEL EXAMPLE

SE D 25-25 L-1 C - 12 DL

- ELECTRICAL UNLOADING PUMP
- SERIES
- SECTION SIZES
  NOTE: FOR STANDARD PORTS REAR SECTION MUST BE EQUAL TO OR LARGER THAN FRONT SECTION
- ROTATION
- SHAFT
- FLANGE
- VOLTAGE
  12=12VDC
  24=24VDC
- TERMINATION
  DL=LEADWIRES

## MOUNTING DIMENSIONS

| SIZE | A | B | - |
|---|---|---|---|
| D15 | 1.25 | 3.02 | - |
| D20 | 1.36 | 3.31 | - |
| D25 | 1.50 | 3.59 | - |
| D30 | 1.64 | 3.87 | - |
| D35 | 1.85 | 4.16 | - |
| D40 | 1.85 | 4.44 | - |
| D45 | 2.16 | 4.73 | - |

OTHER PORT TYPES AVAILABLE CONSULT FACTORY

FOR METRIC DIMENSIONS MULTIPLY 25.4 x IN. = mm

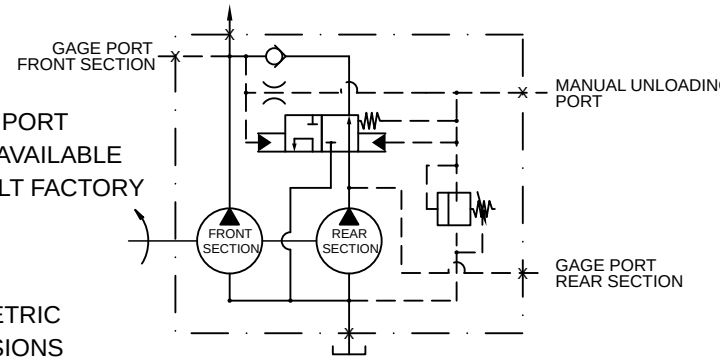


SLD SERIES SCHEMATIC

UNLESS OTHERWISE SPECIFIED, ALL LINEAR DIMENSIONS ARE IN INCHES.

# TYPICAL PERFORMANCE DATA

SAE 10W oil @ 150 DEGREES FAHRENHEIT
(150 SSU)

## 'SLD / SED' SERIES PUMP FLOW PER SECTION @ 2500 PSI - SAE 10W OIL @ 150 DEGREES FAHRENHEIT

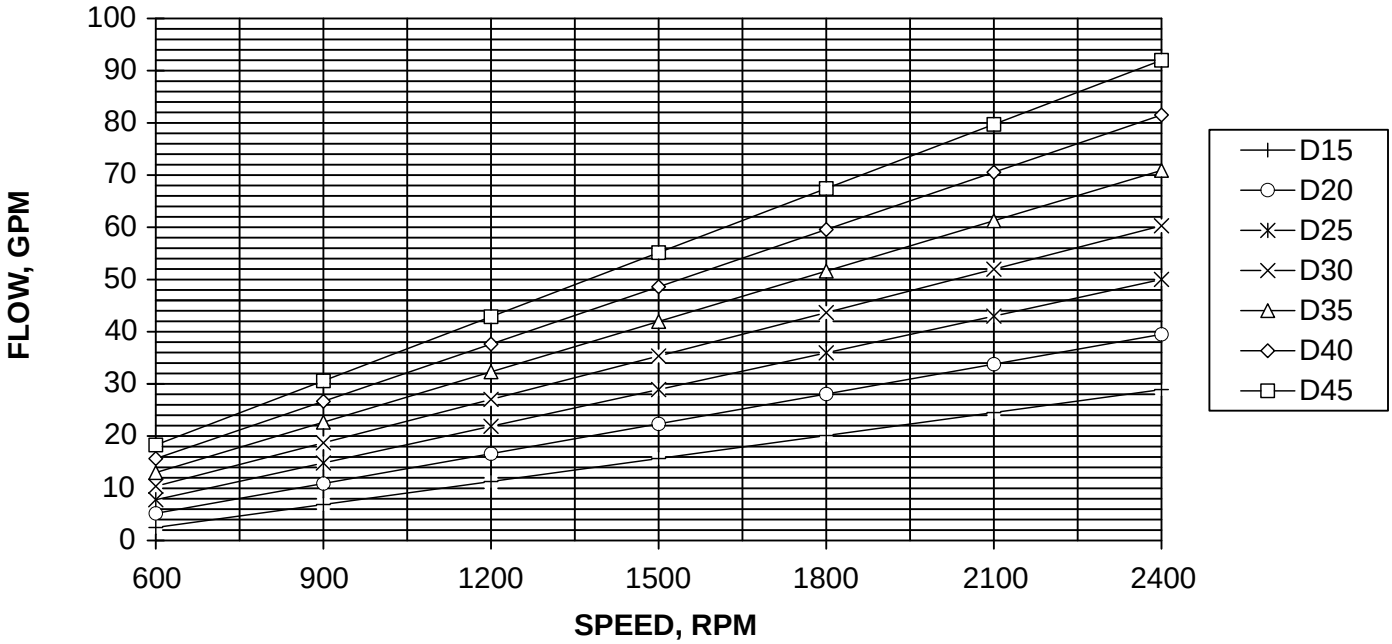


## 'SLD / SED' SERIES PUMP HORSEPOWER PER SECTION @ 2500 PSI

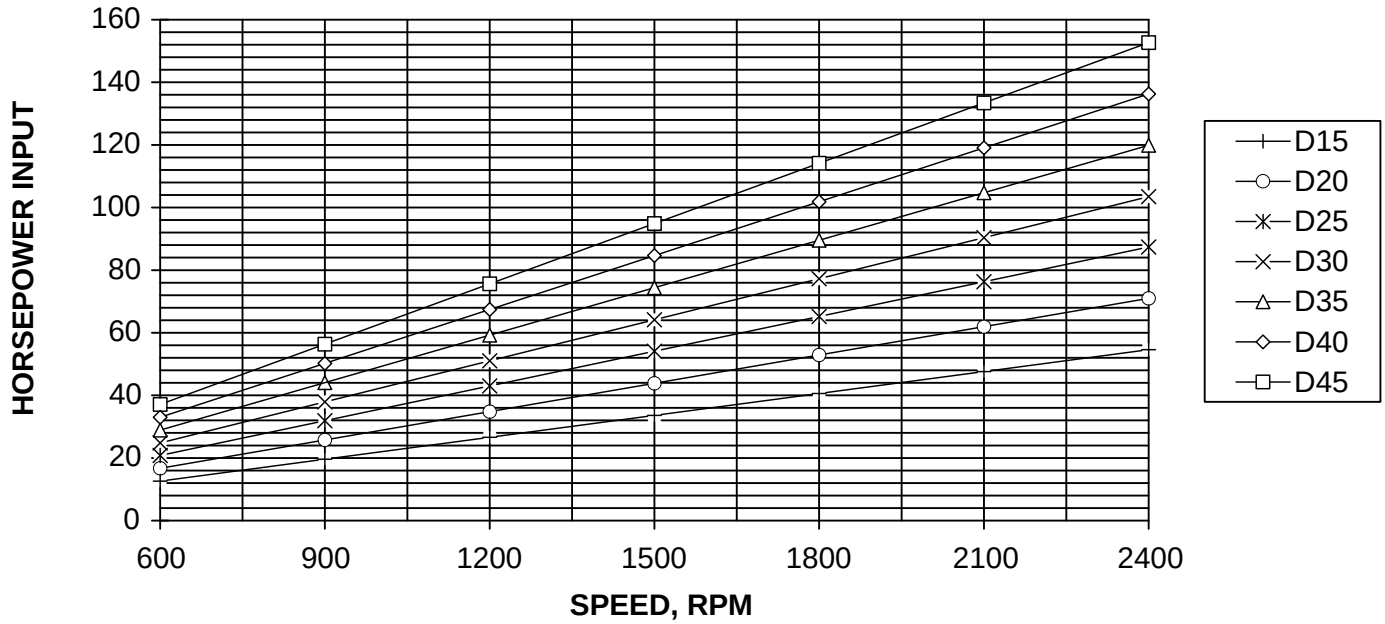


GEARTEK® FLUID POWER PUMPS AND MOTORS

**DIVISION OF HYDRAULIC ANALYSIS, INC.**