GEARTEK®

HYDRAULIC GEAR PUMPS AND MOTORS

# 'DTC' Series

## *TANDEM PUMP*

## Performance Data

| MODEL SIZE | DISPLACEMENT/REVOLUTION (THEORETICAL) | | | MAXIMUM NORMAL PRESSURE RATINGS | | MAXIMUM SPEED (RPM) |
|---|---|---|---|---|---|---|
| | U.S. GALLONS | CUBIC INCHES | CUBIC CENT. | PSI | BAR | |
| D15 | .0129 | 2.98 | 48.8 | 4000 | 276 | 2500 |
| D20 | .0172 | 3.97 | 65.1 | 3800 | 262 | 2500 |
| D25 | .0215 | 4.97 | 81.4 | 3000 | 207 | 2500 |
| D30 | .0258 | 5.96 | 97.6 | 2500 | 172 | 2500 |
| D35 | .0301 | 6.95 | 113.9 | 2500* | 172 | 2500 |
| D40 | .0344 | 7.95 | 130.2 | 2500* | 172 | 2500 |
| D45 | .0387 | 8.94 | 146.5 | 2500* | 172 | 2500 |
| C45 | .0038 | 0.88 | 14.4 | 3500 | 241 | 2500 |
| C65 | .0055 | 1.27 | 20.8 | 3500 | 241 | 2500 |
| C85 | .0072 | 1.66 | 27.2 | 3500 | 241 | 2500 |
| C100 | .0085 | 1.96 | 32.1 | 3500 | 241 | 2500 |
| C115 | .0097 | 2.24 | 36.7 | 3000 | 207 | 2500 |
| C150 | .0127 | 2.93 | 48.1 | 2500 | 172 | 2500 |
| C180 | .0152 | 3.51 | 57.5 | 2500* | 172 | 2500 |
| C200 | .0169 | 3.90 | 63.9 | 2500* | 172 | 2200 ** |

* CONSULT FACTORY WITH TYPE APPLICATION

** WHEN USING C200 ON REAR - MAXIMUM SPEED FOR UNIT IS LIMITED TO 2200 RPM

- CAST IRON THROUGHOUT
- PRESSURES TO 4000 PSI
- FLOWS TO 97 GPM
- HEAVY DUTY SLEEVE TYPE BEARINGS
- DOUBLE VITON® SHAFT SEALS STANDARD
- PRESSURE COMPENSATED THRUST PLATES
- DESIGNED FOR HEAVY DUTY APPLICATIONS
- MULTI-STAGE CONFIGURATIONS
- VARIOUS SHAFT, FLANGE AND PORT OPTIONS
- PRECISION GEARS MACHINED FROM SOLID BAR STOCK
- COMPATIBLE WITH MOST FIRE RESISTANT FLUIDS
- CONTAMINANT RESISTANT
- COMPUTER DESIGNED AND MANUFACTURED
- QUALITY CERTIFIED
- FLEXIBLE DESIGN FOR NEW OR OEM REPLACEMENTS
- SERVICE SUPPORTED BY DEDICATION AND INVENTORY

P. O. BOX 2160, 1506 FULTON DR.
CORINTH, MISSISSIPPI 38835

Phone: 662/286-2252 Fax: 662/287-6580 E-mail: haisales@geartek.com Http: www.geartek.com

## SHAFTS AVAILABLE

**1**

### 1 1/4"-14 TOOTH SPLINE

**SPLINE DATE**

| | |
|---|---|
| DIAMETRAL PITCH | 12/24 |
| PRESSURE ANGLE | 30° |
| NO. OF TEETH | 14 |
| MINOR DIA. | 1.062-1.050 |

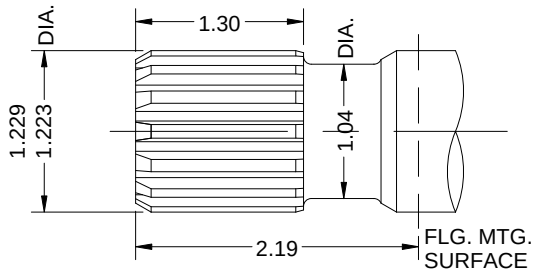


**4**

### 7/8"-13 TOOTH SPLINE

**AVAILABLE ON 15 THRU 35 SIZES**
**TORQUE LIMIT 184 FT.-LBS.**

**SPLINE DATE**

| | |
|---|---|
| DIAMETRAL PITCH | 16/32 |
| PRESSURE ANGLE | 30° |
| NO. OF TEETH | 13 |
| MINOR DIA. | .733-.722 |

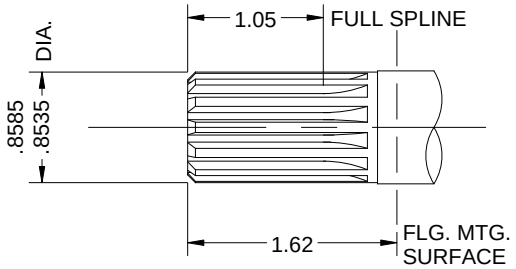


**3**

### 1 1/4" STRAIGHT

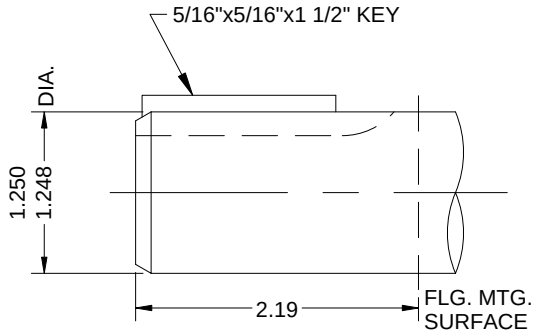


## STANDARD SAE 4-BOLT CONNECTOR PORTS

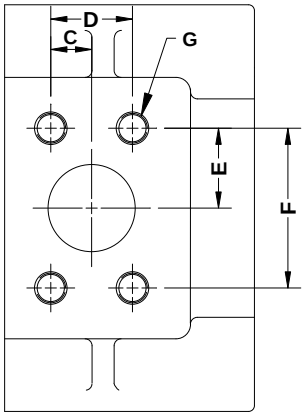


**SAE 4-BOLT CONN. PORTS**

| SIZE | INLET SIZE | OUTLET SIZE |
|---|---|---|
| D15 | 1 1/2" | 1" |
| D20 | 1 1/2" | 1" |
| D25 | 2" | 1 1/4" |
| D30 | 2" | 1 1/4" |
| D35 | 2" | 1 1/4" |
| D40 | 2 1/2" | 1 1/4" |
| D45 | 2 1/2" | 1 1/4" |
| C45 | - | 3/4" |
| C65 | - | 3/4" |
| C85 | - | 3/4" |
| C100 | - | 3/4" |
| C115 | - | 3/4" |
| C150 | - | 3/4" |
| C180 | - | 3/4" |
| C200 | | 3/4" |

**4-BOLT CONNECTOR CHART**

| SIZE | C | D | E | F | G |
|---|---|---|---|---|---|
| 3/4" | .43 | .875 | .93 | 1.875 | 3/8-16NC |
| 1 | .51 | 1.031 | 1.03 | 2.062 | 3/8-16NC |
| 1 1/4" | .59 | 1.188 | 1.15 | 2.313 | 7/16-14NC |
| 1 1/2" | .70 | 1.406 | 1.37 | 2.750 | 1/2-13NC |
| 2" | .84 | 1.688 | 1.53 | 3.062 | 1/2-13NC |
| 2 1/2" | 1.00 | 2.000 | 1.75 | 3.500 | 1/2-13NC |



UNLESS OTHERWISE SPECIFIED, ALL LINEAR DIMENSIONS ARE IN INCHES.

## FLANGES AVAILABLE

### B — SAE 2X4 BOLT 'B' FLANGE

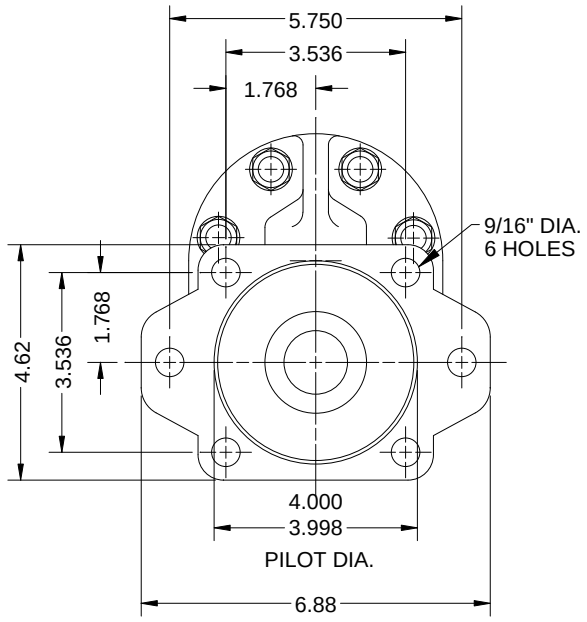


### C — SAE 2X4 BOLT 'C' FLANGE

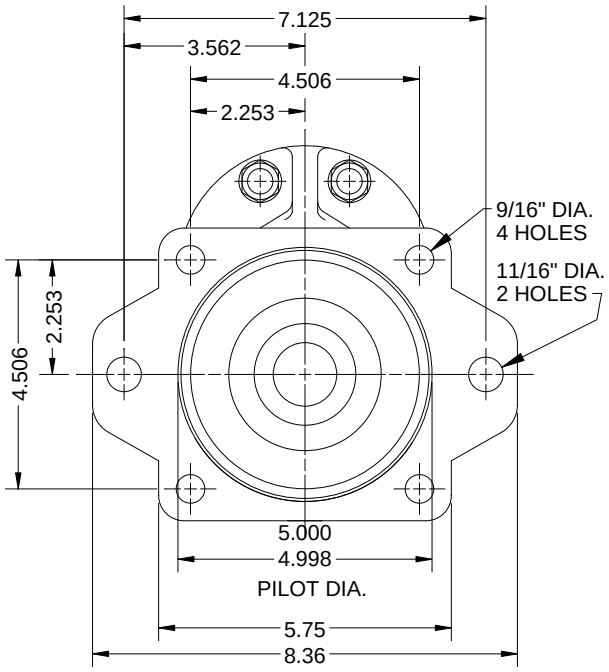


## DIMENSIONAL DATA

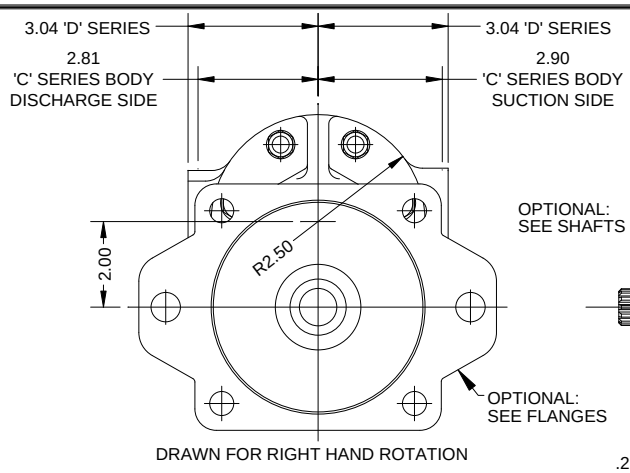


DRAWN FOR RIGHT HAND ROTATION

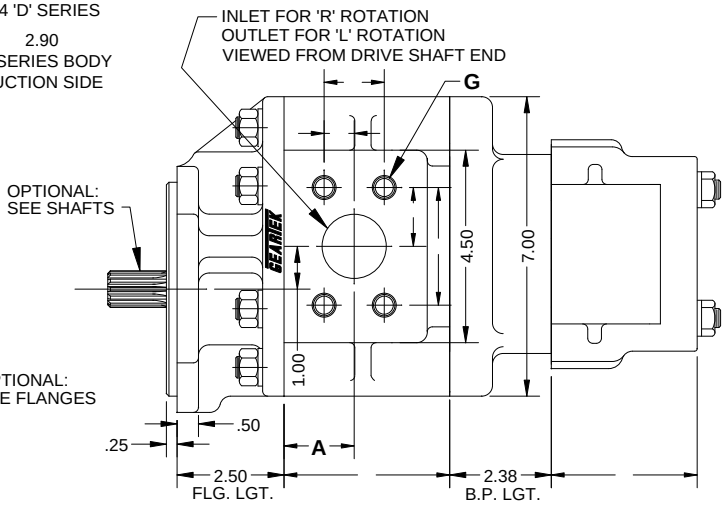


### MODEL EXAMPLE

**DT 25 C 65 R - 1 C**

- DT — SERIES
- 25 — SIZE ('D' SERIES)
- C — SERIES
- 65 — SIZE ('C' SERIES)
- R — ROTATION: R=CLOCKWISE, L=COUNTERCLOCKWISE
- 1 — SHAFT
- C — FLANGE

### MOUNTING DIMENSIONS

| SIZE | A | B | H |
|---|---|---|---|
| D15 | 1.25 | 3.02 | - |
| D20 | 1.36 | 3.31 | - |
| D25 | 1.50 | 3.59 | - |
| D30 | 1.64 | 3.87 | - |
| D35 | 1.85 | 4.16 | - |
| D40 | 1.85 | 4.44 | - |
| D45 | 2.16 | 4.73 | - |
| C45 | 1.06 | - | 2.98 |
| C65 | 1.06 | - | 3.20 |
| C85 | 1.06 | - | 3.41 |
| C100 | 1.06 | - | 3.57 |
| C115 | 1.25 | - | 3.73 |
| C150 | 1.25 | - | 4.10 |
| C180 | 1.25 | - | 4.42 |
| C200 | 1.25 | - | 4.64 |

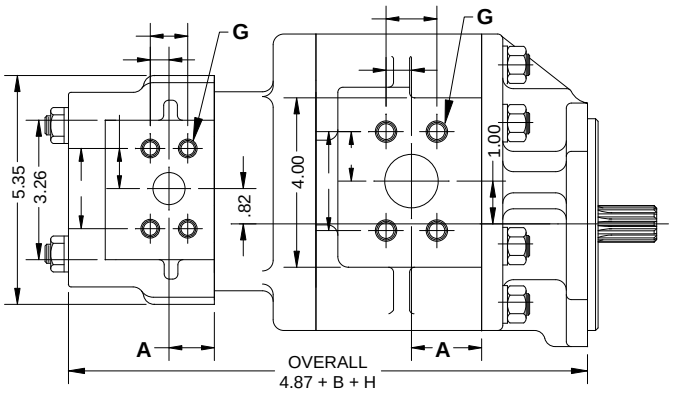


FOR METRIC DIMENSIONS - MULTIPLY 25.4 x IN. = mm
CONSULT FACTORY FOR OTHER PORT TYPES THAT MAY BE AVAILABLE



UNLESS OTHERWISE SPECIFIED, ALL LINEAR DIMENSIONS ARE IN INCHES.

**FOR TYPICAL PERFORMANCE DATA**
**FOR FRONT SECTION OF "DTC' SERIES**
**USE THE 'D' SERIES STANDARD CURVES**

**FOR TYPICAL PERFORMANCE DATA**
**FOR REAR SECTION OF "DTC' SERIES**
**USE THE 'C' SERIES STANDARD CURVES**

GEARTEK® FLUID POWER PUMPS AND MOTORS

**DIVISION OF HYDRAULIC ANALYSIS, INC.**