GEARTEK®

HYDRAULIC GEAR PUMPS AND MOTORS

# 'ME' Series

## TANDEM MOTOR

## BI-DIRECTIONAL

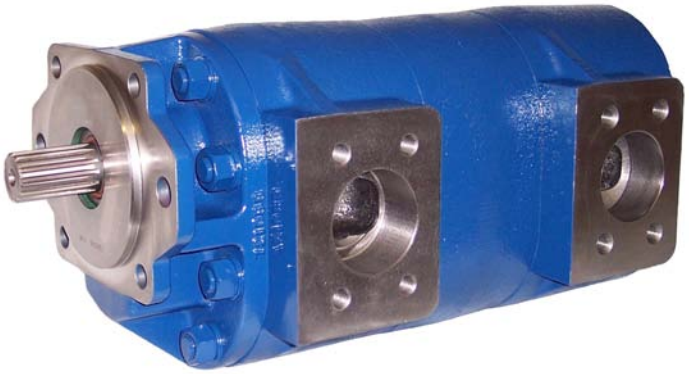

## Performance Data

| MODEL SIZE | DISPLACEMENT/REVOLUTION (THEORETICAL) | | | MIN. RPM | MAX. RPM | MAXIMUM PRESSURE | | IN/LB. TORQUE @ 2500 PSI | | HP @ 2500 RPM 2500 PSI |
|---|---|---|---|---|---|---|---|---|---|---|
| | U.S. GALLONS | CUBIC INCHES | CUBIC CENT. | | | PSI | BAR | START | RUN | |
| ME30 | .0258 | 5.98 | 98.0 | 600 | 2500 | 2500 | 172 | 1520 | 2181 | 74 |
| ME35 | .0300 | 6.93 | 113.5 | 600 | 2500 | 2500 | 172 | 1800 | 2561 | 90 |
| ME40 | .0342 | 7.90 | 129.4 | 600 | 2500 | 2500 | 172 | 2050 | 2940 | 105 |
| ME45 | .0386 | 8.92 | 146.2 | 600 | 2500 | 2500 | 172 | 2350 | 3320 | 124 |
| ME50 | .0427 | 9.86 | 161.6 | 600 | 2500 | 2500 | 172 | 2950 | 3600 | 132 |
| ME55 | .0470 | 10.86 | 178.0 | 600 | 2500 | 2500 | 172 | 3500 | 4000 | 150 |
| ME66 | .0570 | 13.17 | 215.9 | 600 | 2500 | 2500 | 172 | 4400 | 4900 | 170 |
| ME77 | .0658 | 15.20 | 249.2 | 600 | 2500 | 2500 | 172 | 4550 | 5500 | 200 |
| ME95 | .0819 | 18.91 | 309.9 | 600 | 2000 | 2000 | 138 | 4996 | 6019 | 203 |

- CAST IRON THROUGHOUT
- PRESSURES TO 4000 PSI
- FLOWS TO 204 GPM
- HEAVY DUTY SLEEVE TYPE BEARINGS
- DOUBLE VITON® SHAFT SEALS STANDARD
- PRESSURE COMPENSATED THRUST PLATES
- DESIGNED FOR HEAVY DUTY APPLICATIONS
- SINGLE AND MULTI-STAGE CONFIGURATIONS
- VARIOUS SHAFT, FLANGE AND PORT OPTIONS
- PRECISION GEARS MACHINED FROM SOLID BAR STOCK
- COMPATIBLE WITH MOST FIRE RESISTANT FLUIDS
- CONTAMINANT RESISTANT
- COMPUTER DESIGNED AND MANUFACTURED
- QUALITY CERTIFIED
- FLEXIBLE DESIGN FOR NEW OR OEM REPLACEMENTS
- SERVICE SUPPORTED BY DEDICATION AND INVENTORY

P. O. BOX 2160, 1506 FULTON DR.
CORINTH, MISSISSIPPI 38835

Phone: 662/286-2252 Fax: 662/287-6580 E-mail: haisales@geartek.com Http: www.geartek.com

# SHAFTS AVAILABLE

**1**

## 1 1/4"-14 TOOTH SPLINE

**TORQUE LIMIT 650 FT.-LBS.**

**SPLINE DATE**

| | |
|---|---|
| DIAMETRAL PITCH | 12/24 |
| PRESSURE ANGLE | 30° |
| NO. OF TEETH | 14 |
| MINOR DIA. | 1.062-1.050 |

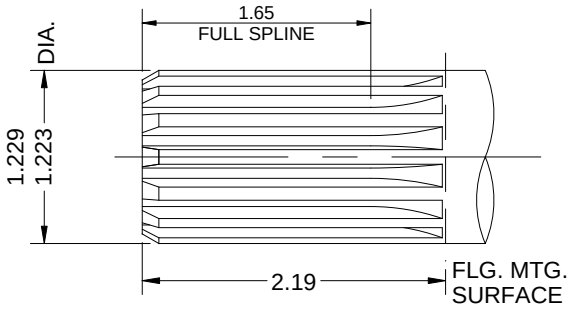


**7**
**8**

## 1 1/2" STRAIGHT

**E55 & E77 ONLY**

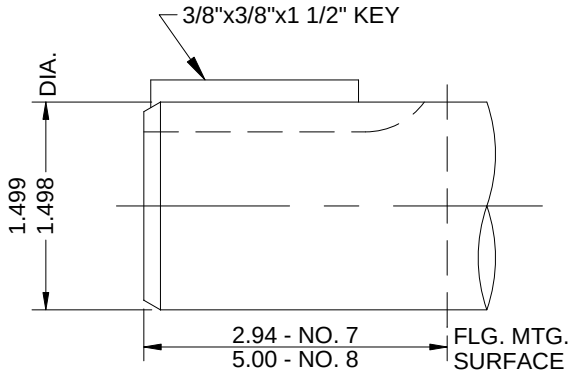


**6**

## 1 1/2"-17 TOOTH SPLINE

**SPLINE DATE**

| | |
|---|---|
| DIAMETRAL PITCH | 12/24 |
| PRESSURE ANGLE | 30° |
| NO. OF TEETH | 17 |
| MINOR DIA. | 1.290-1.300 |

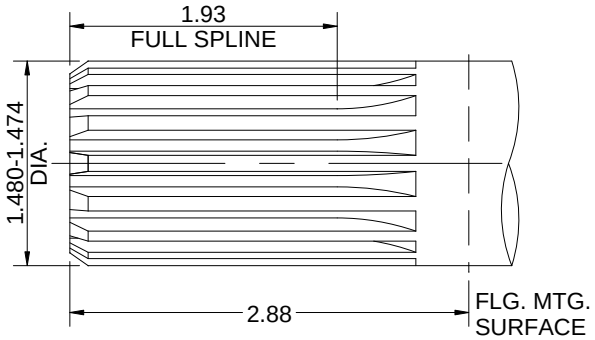


**9**

## 1 1/2"-14 TOOTH SPLINE

**SPLINE DATE**

| | |
|---|---|
| DIAMETRAL PITCH | 10/20 |
| PRESSURE ANGLE | 30° |
| NO. OF TEETH | 14 |
| MINOR DIA. | 1.264-1.276 |

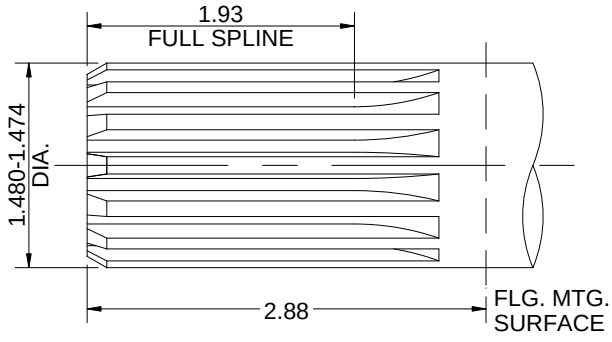


# STANDARD SAE 4-BOLT CONNECTOR PORTS

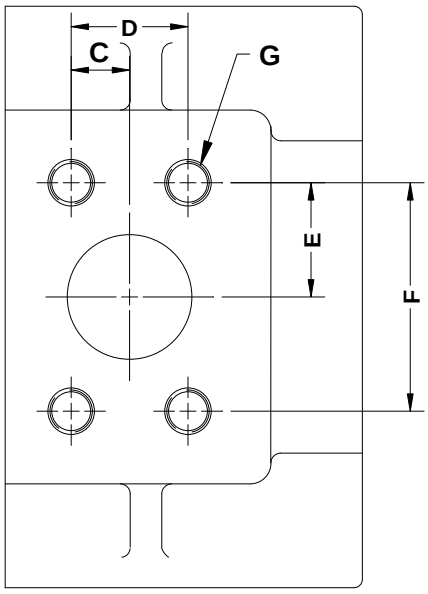


**SAE 4-BOLT CONN. PORTS**

| SIZE | INLET SIZE | OUTLET SIZE |
|---|---|---|
| ME30 | 2" | 2" |
| ME35 | 2" | 2" |
| ME40 | 2" | 2" |
| ME45 | 2" | 2" |
| ME50 | 2" | 2" |
| ME55 | 2" | 2" |
| ME66 | 2" | 2" |
| ME77 | 2" | 2" |
| | | |

**4-BOLT CONNECTOR CHART**

| SIZE | C | D | E | F | G |
|---|---|---|---|---|---|
| | | | | | |
| 2" | .84 | 1.688 | 1.53 | 3.062 | 1/2-13NC |
| | | | | | |
| | | | | | |
| | | | | | |

Revised: February 2, 2004

UNLESS OTHERWISE SPECIFIED, ALL LINEAR DIMENSIONS ARE IN INCHES.

## FLANGES AVAILABLE

**C**

### SAE 2X4 BOLT 'C' FLANGE

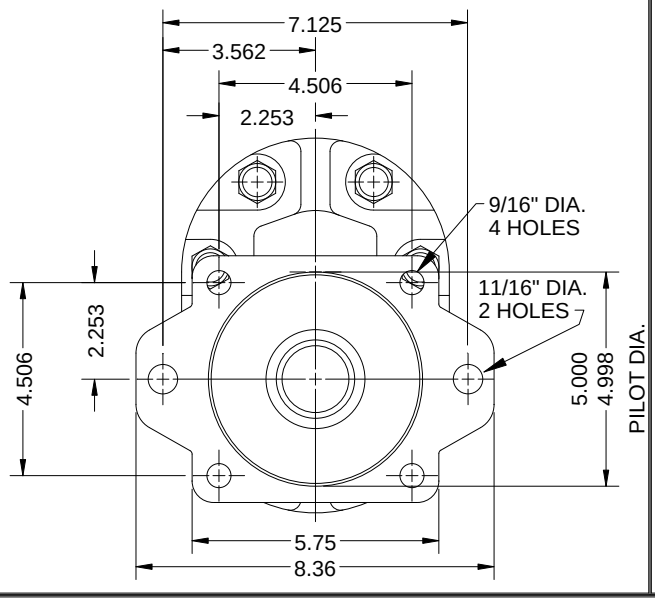


## DIMENSIONAL DATA

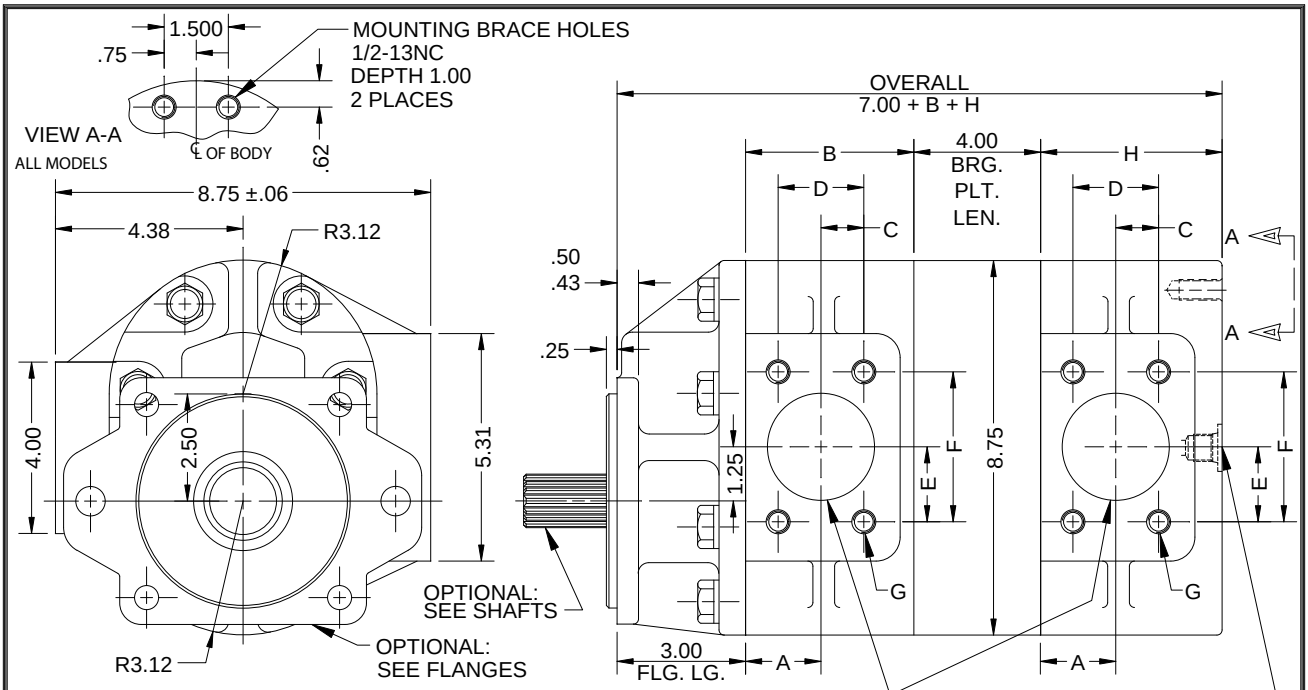


FOR METRIC DIMENSIONS
MULTIPLY 25.4 X IN. = mm

INLET FOR 'R' ROTATION
OUTLET FOR 'L' ROTATION
VIEWED FROM DRIVE END

UNLESS HIGH PRESSURE SEAL IS USED
TAIL DRAIN MUST BE USED IF BACK
PRESSURE EXCEEDS 100 PSI ON MOTOR
3/4-16UNF-2B ON MOTOR CENTERLINE
NO. 8 PORT

### MOUNTING DIMENSIONS

| SIZE | A | B | H |
|---|---|---|---|
| ME30 | 1.75 | 4.33 | 4.92 |
| ME35 | 1.92 | 4.51 | 5.10 |
| ME40 | 2.09 | 4.68 | 5.27 |
| ME45 | 2.28 | 4.87 | 5.46 |
| ME50 | 2.45 | 5.04 | 5.63 |
| ME55 | 2.63 | 5.22 | 5.81 |
| ME66 | 3.05 | 5.64 | 6.23 |
| ME77 | 3.42 | 6.01 | 6.60 |
| - | - | - | - |

OTHER PORT TYPES AVAILABLE
CONSULT FACTORY

✳ THE OPTIONAL HIGH PRESSURE SEAL MAY BE USED WHEN DRAIN LINES ARE NOT PRACTICAL. FOR SYSTEMS TOLERATING A DRAIN LINE, ELIMINATE THE 'H' FROM THE MODEL CODE.

### MODEL EXAMPLE

**ME ✳ 30-30 - 1 C**

- ME: SERIES
- ✳: OPTIONAL: SPECIFY CODE 'H' THIS AREA FOR HIGH PRESSURE SEAL OTHERWISE: LEAVE BLANK
- 30-30: SIZE
- 1: SHAFT
- C: FLANGE



UNLESS OTHERWISE SPECIFIED, ALL LINEAR DIMENSIONS ARE IN INCHES.

## GEARTEK ME30 MOTOR PERFORMANCE

SAE 10W oil @ 150 degrees F

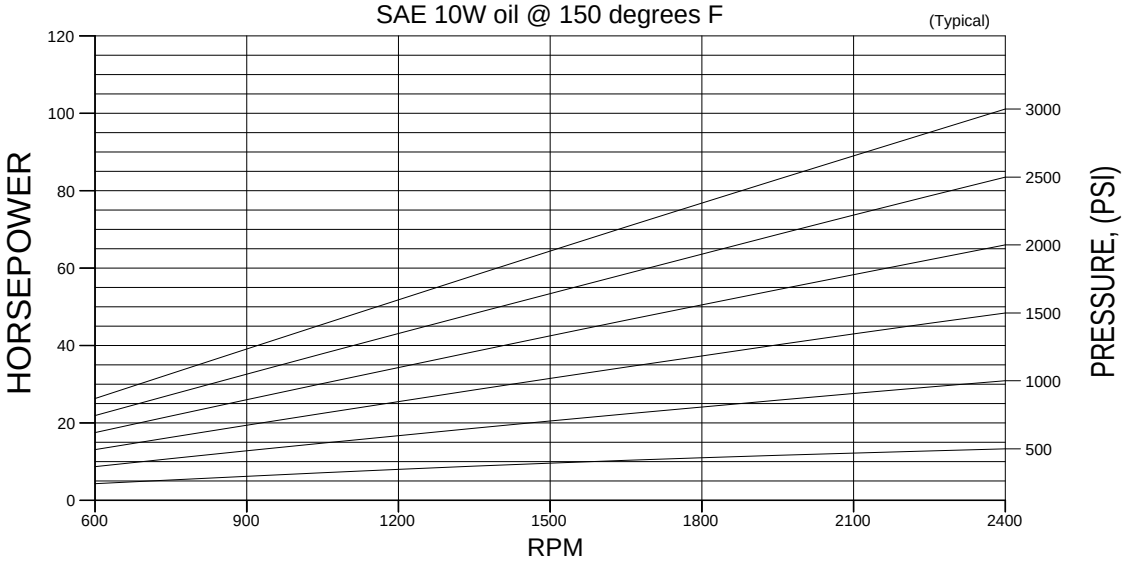


## GEARTEK ME35 MOTOR PERFORMANCE

SAE 10W oil @ 150 degrees F

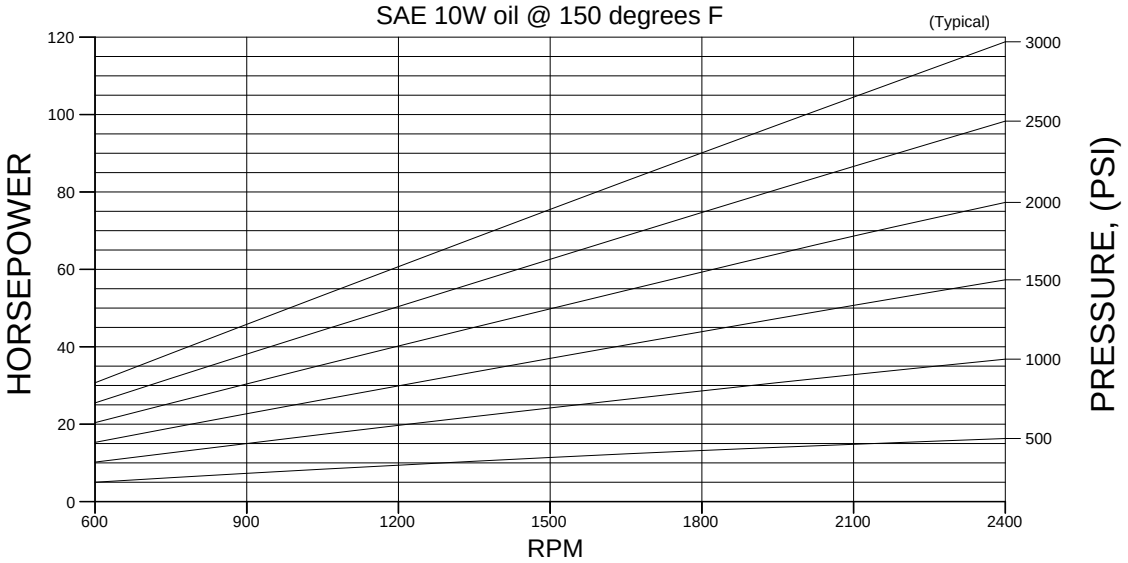


## GEARTEK ME40 MOTOR PERFORMANCE

SAE 10W oil @ 150 degrees F

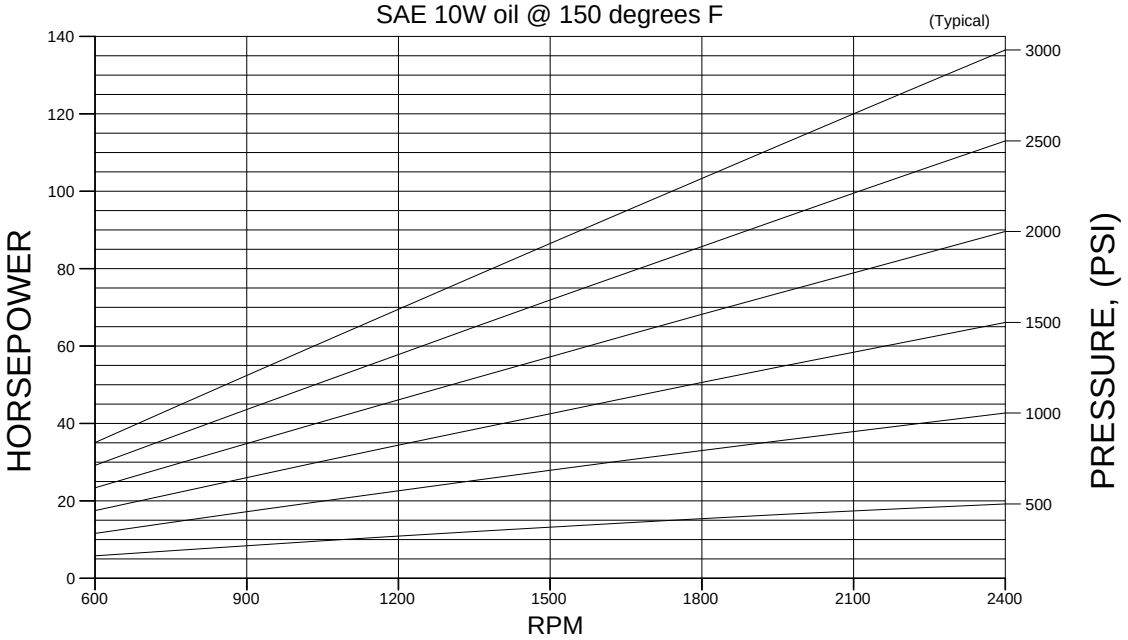

## GEARTEK ME45 MOTOR PERFORMANCE

SAE 10W oil @ 150 degrees F

(Typical)

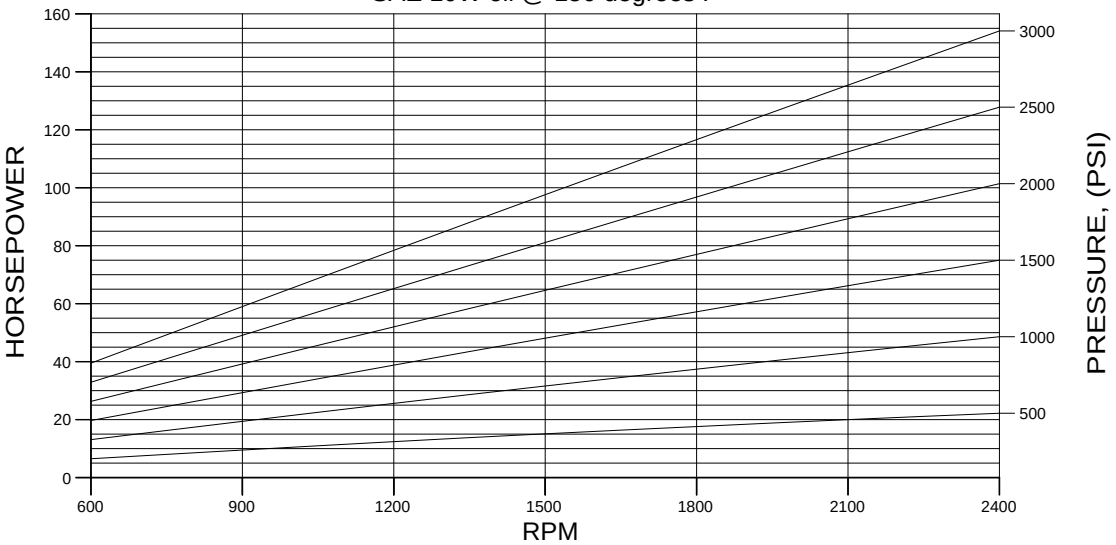


## GEARTEK ME50 MOTOR PERFORMANCE

SAE 10W oil @ 150 degrees F

(Typical)

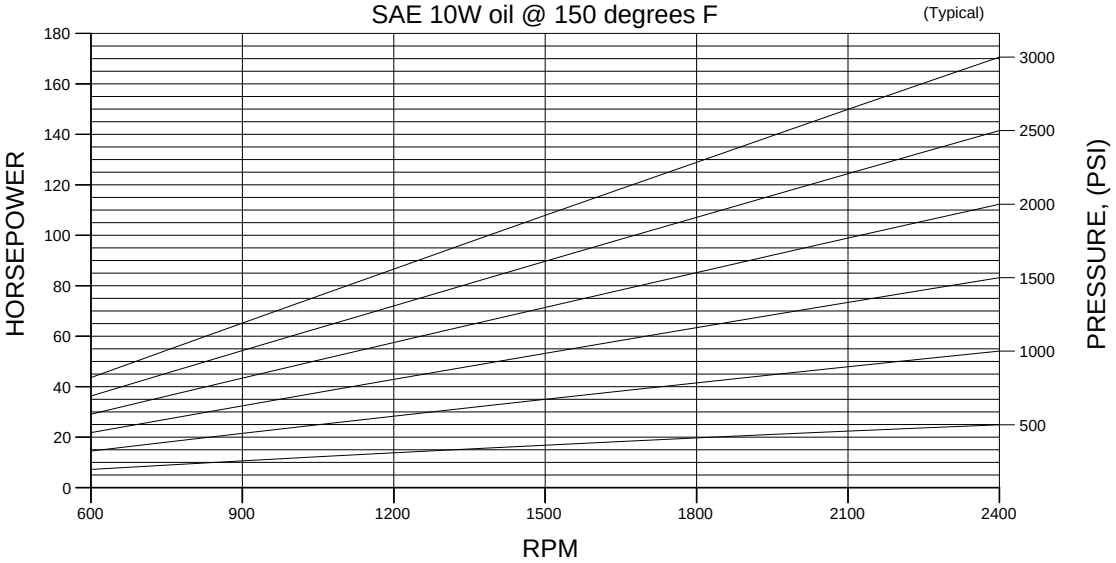


## GEARTEK ME55 MOTOR PERFORMANCE

SAE 10W oil @ 150 degrees F

(Typical)

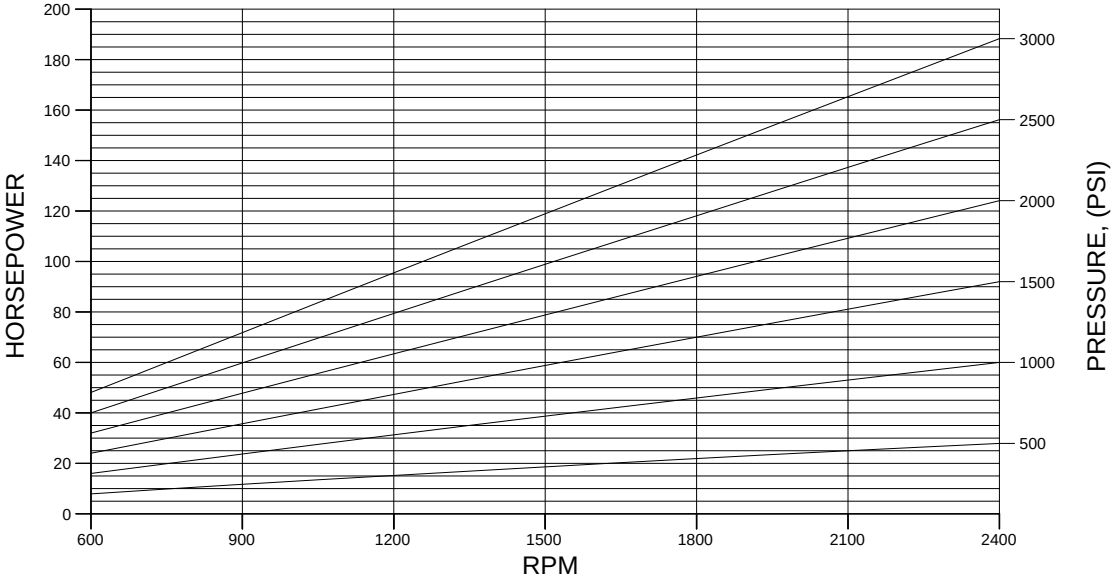

## GEARTEK ME66 MOTOR PERFORMANCE

SAE 10W oil @ 150 degrees F

(Typical)

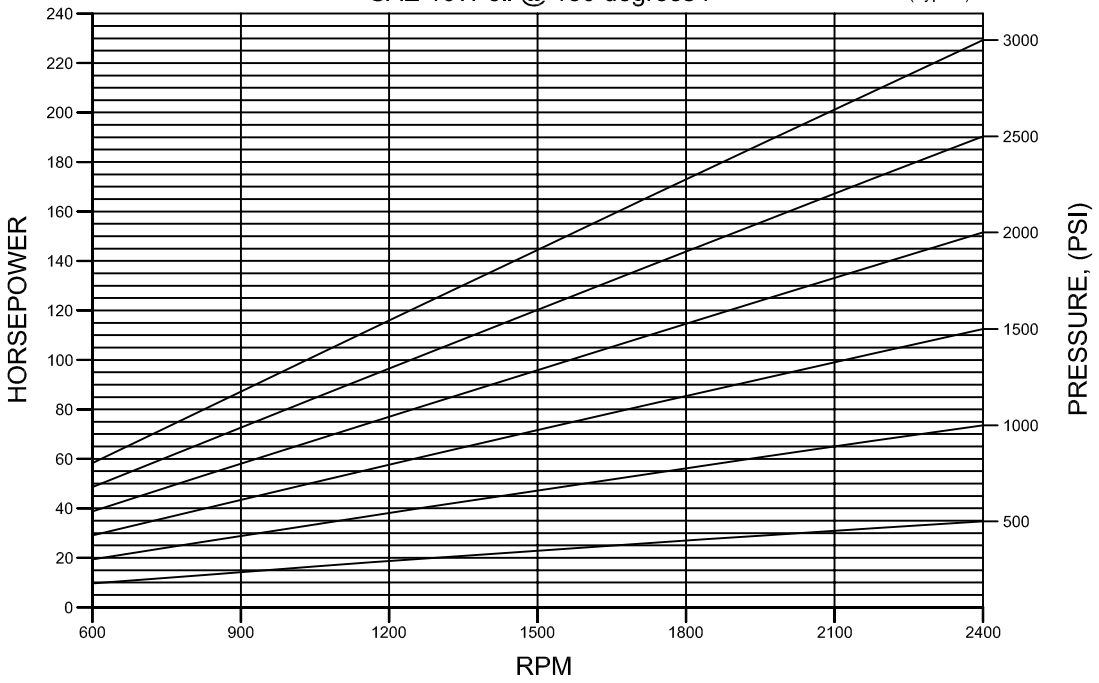


## GEARTEK ME77 MOTOR PERFORMANCE

SAE 10W oil @ 150 degrees F

(Typical)

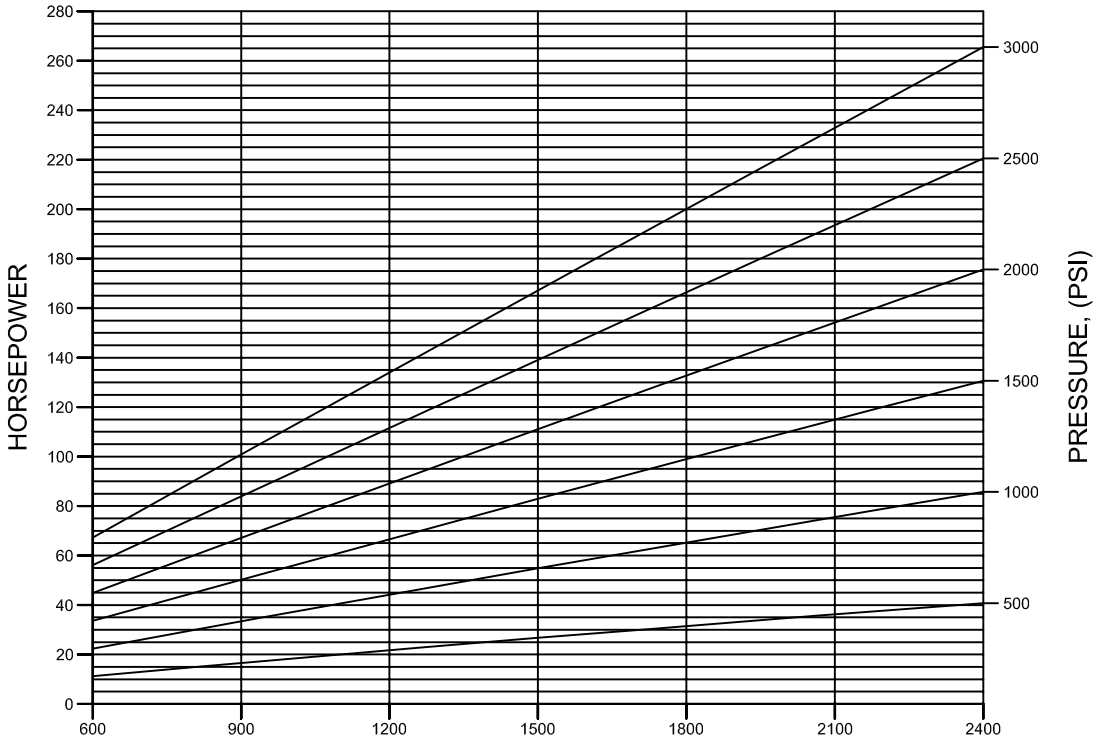


GEARTEK® FLUID POWER PUMPS AND MOTORS

**DIVISION OF HYDRAULIC ANALYSIS, INC.**