GEARTEK®

HYDRAULIC GEAR PUMPS AND MOTORS

# 'ETD' Series

## *TANDEM PUMP*

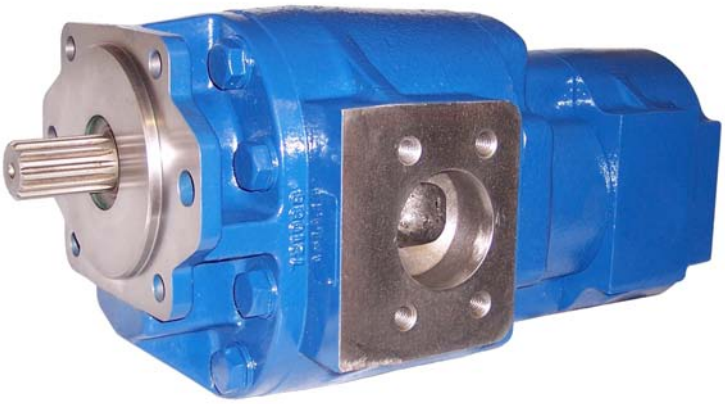

## Performance Data

| MODEL SIZE | DISPLACEMENT/REVOLUTION (THEORETICAL) | | | MINIMUM RPM | MAXIMUM RPM | MAXIMUM PRESSURE | |
|---|---|---|---|---|---|---|---|
| | U.S. GALLONS | CUBIC INCHES | CUBIC CENT. | | | PSI | BAR |
| E30 | .0258 | 5.98 | 98.0 | 600 | 2500 | 4000 | 276 |
| E35 | .0300 | 6.93 | 113.5 | 600 | 2500 | 4000 | 276 |
| E40 | .0342 | 7.90 | 129.4 | 600 | 2500 | 4000* | 276 |
| E45 | .0386 | 8.92 | 146.2 | 600 | 2500 | 4000* | 276 |
| E50 | .0427 | 9.86 | 161.6 | 600 | 2500 | 3800* | 262 |
| E55 | .0470 | 10.86 | 178.0 | 600 | 2500 | 3400* | 234 |
| E66 | .0570 | 13.17 | 215.9 | 600 | 2500 | 2900* | 200 |
| E77 | .0658 | 15.20 | 249.2 | 600 | 2500 | 2500* | 172 |
| D15 | .0129 | 2.98 | 48.8 | 600 | 2500 | 3500 | 241 |
| D20 | .0172 | 3.97 | 65.1 | 600 | 2500 | 3500 | 241 |
| D25 | .0215 | 4.97 | 81.4 | 600 | 2500 | 3000 | 207 |
| D30 | .0258 | 5.96 | 97.6 | 600 | 2500 | 2500 | 172 |
| D35 | .0301 | 6.95 | 113.9 | 600 | 2500 | 2500* | 172 |

* CONSULT FACTORY WITH TYPE APPLICATION

- CAST IRON THROUGHOUT
- PRESSURES TO 4000 PSI
- FLOWS TO 164 GPM
- HEAVY DUTY SLEEVE TYPE BEARINGS
- DOUBLE VITON® SHAFT SEALS STANDARD
- PRESSURE COMPENSATED THRUST PLATES
- DESIGNED FOR HEAVY DUTY APPLICATIONS
- MULTI-STAGE CONFIGURATIONS
- VARIOUS SHAFT, FLANGE AND PORT OPTIONS
- PRECISION GEARS MACHINED FROM SOLID BAR STOCK
- COMPATIBLE WITH MOST FIRE RESISTANT FLUIDS
- CONTAMINANT RESISTANT
- COMPUTER DESIGNED AND MANUFACTURED
- QUALITY CERTIFIED
- FLEXIBLE DESIGN FOR NEW OR OEM REPLACEMENTS
- SERVICE SUPPORTED BY DEDICATION AND INVENTORY

P. O. BOX 2160, 1506 FULTON DR.
CORINTH, MISSISSIPPI 38835

Phone: 662/286-2252 Fax: 662/287-6580 E-mail: haisales@geartek.com Http: www.geartek.com

## SHAFTS AVAILABLE

**1**

### 1 1/4"-14 TOOTH SPLINE

**TORQUE LIMIT 650 FT.-LBS.**

**SPLINE DATE**

| | |
|---|---|
| DIAMETRAL PITCH | 12/24 |
| PRESSURE ANGLE | 30° |
| NO. OF TEETH | 14 |
| MINOR DIA. | 1.062-1.050 |

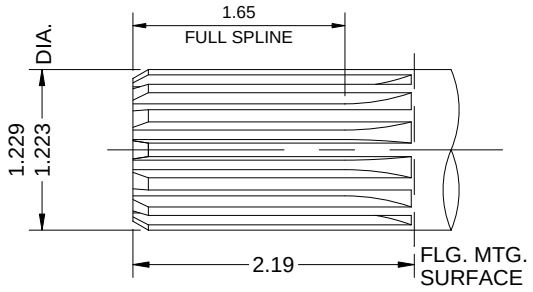


**7**

**8**

**E55 & E77 ONLY**

### 1 1/2" STRAIGHT

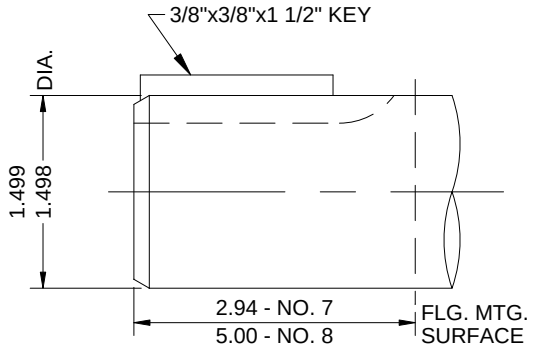


**6**

### 1 1/2"-17 TOOTH SPLINE

**SPLINE DATE**

| | |
|---|---|
| DIAMETRAL PITCH | 12/24 |
| PRESSURE ANGLE | 30° |
| NO. OF TEETH | 17 |
| MINOR DIA. | 1.290-1.300 |

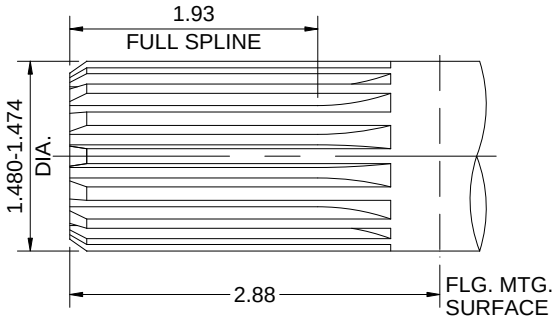


**9**

### 1 1/2"-14 TOOTH SPLINE

**SPLINE DATE**

| | |
|---|---|
| DIAMETRAL PITCH | 10/20 |
| PRESSURE ANGLE | 30° |
| NO. OF TEETH | 14 |
| MINOR DIA. | 1.264-1.276 |

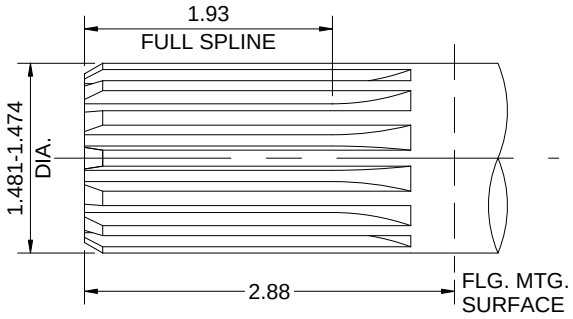


## STANDARD SAE 4-BOLT CONNECTOR PORTS

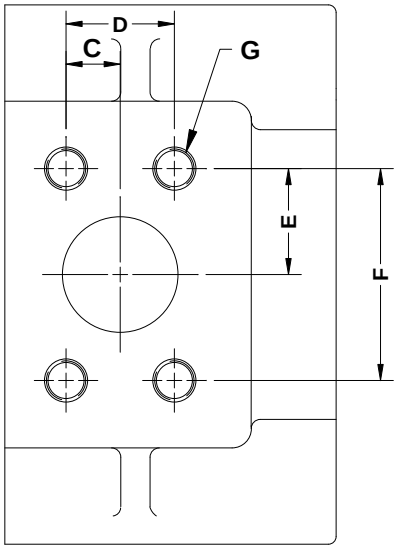


**SAE 4-BOLT CONN. PORTS**

| SIZE | INLET SIZE | OUTLET SIZE |
|---|---|---|
| E30 | 2 1/2" | 1 1/4" |
| E35 | 2 1/2" | 1 1/4" |
| E40 | 2 1/2" | 1 1/4" |
| E45 | 3" | 1 1/4" |
| E50 | 3" | 1 1/2" |
| E55 | 3" | 1 1/2" |
| E66 | 3" | 1 1/2" |
| E77 | 3" | 1 1/2" |
| D15 | - | 1" |
| D20 | - | 1" |
| D25 | - | 1 1/4" |
| D30 | - | 1 1/4" |
| D35 | - | 1 1/4' |

**4-BOLT CONNECTOR CHART**

| SIZE | C | D | E | F | G |
|---|---|---|---|---|---|
| 1" | .51 | 1.031 | 1.03 | 2.062 | 3/8-16NC |
| 1 1/4" | .59 | 1.188 | 1.15 | 2.313 | 7/16-14NC |
| 1 1/2" | .70 | 1.406 | 1.37 | 2.750 | 1/2-13NC |
| 2 1/2" | 1.00 | 2.000 | 1.75 | 3.500 | 1/2-13NC |
| 3" | 1.21 | 2.438 | 2.09 | 4.188 | 5/8-11NC |

UNLESS OTHERWISE SPECIFIED, ALL LINEAR DIMENSIONS ARE IN INCHES.

## FLANGE AVAILABLE

**C**

### SAE 2X4 BOLT 'C' FLANGE

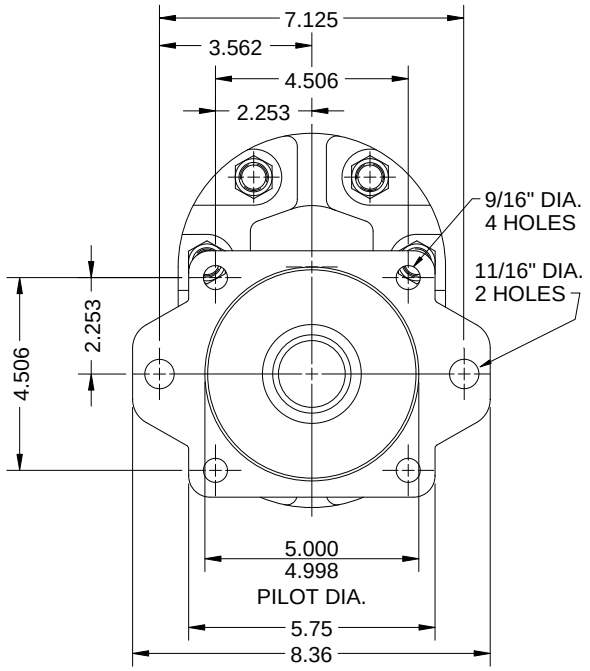


## MODEL EXAMPLE

### MODEL EXAMPLE

**ET 55 - D 25 R - 1 C**

- ET — SERIES
- 55 — 'E' SERIES SIZE
- D — SERIES
- 25 — 'D' SERIES SIZE
- R — ROTATION R=CLOCKWISE L=COUNTERCLOCKWISE
- 1 — SHAFT
- C — FLANGE

## DIMENSIONAL DATA

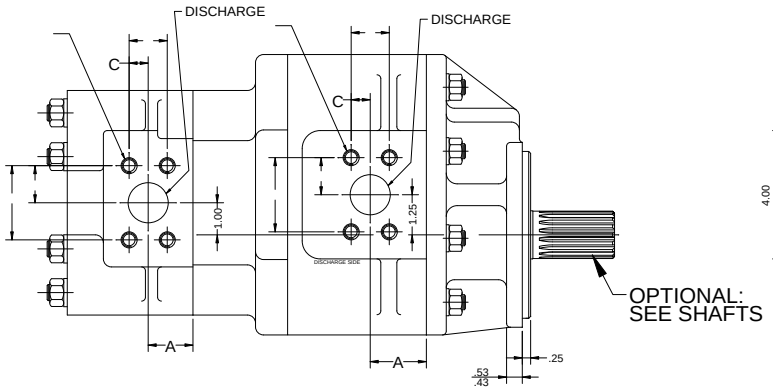


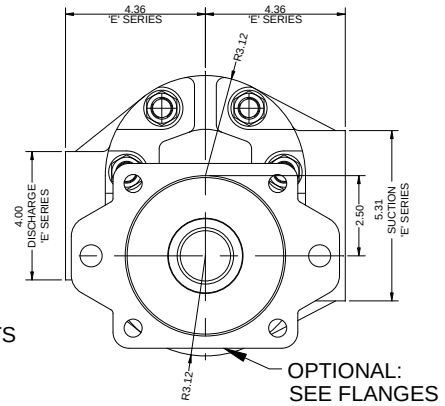


| MOUNTING DIMENSIONS | | |
|---|---|---|
| A | B | H |
| 1.75 | 4.33 | - |
| 1.92 | 4.51 | - |
| 2.09 | 4.68 | - |
| 2.28 | 4.87 | - |
| 2.45 | 5.04 | - |
| 2.63 | 5.22 | - |
| 3.05 | 5.64 | - |
| 3.42 | 6.01 | - |
| | | |
| 1.25 | - | 3.62 |
| 1.36 | - | 3.89 |
| 1.50 | - | 4.18 |
| 1.64 | - | 4.47 |
| 1.85 | - | 4.75 |

INLET FOR 'R' ROTATION
OUTLET FOR 'L' ROTATION
VIEWED FROM DRIVE END

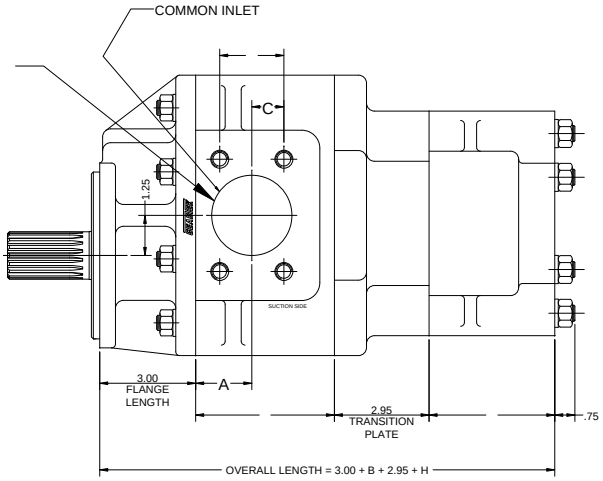


FOR METRIC DIMENSIONS
MULTIPLY 25.4 X IN. = mm

UNLESS OTHERWISE SPECIFIED, ALL LINEAR DIMENSIONS ARE IN INCHES.

# TYPICAL PERFORMANCE DATA

SAE 10W OIL @ 150° (150 SSU)

## 'ETD' SERIES TYPICAL PUMP FLOW @ 2500 PSI

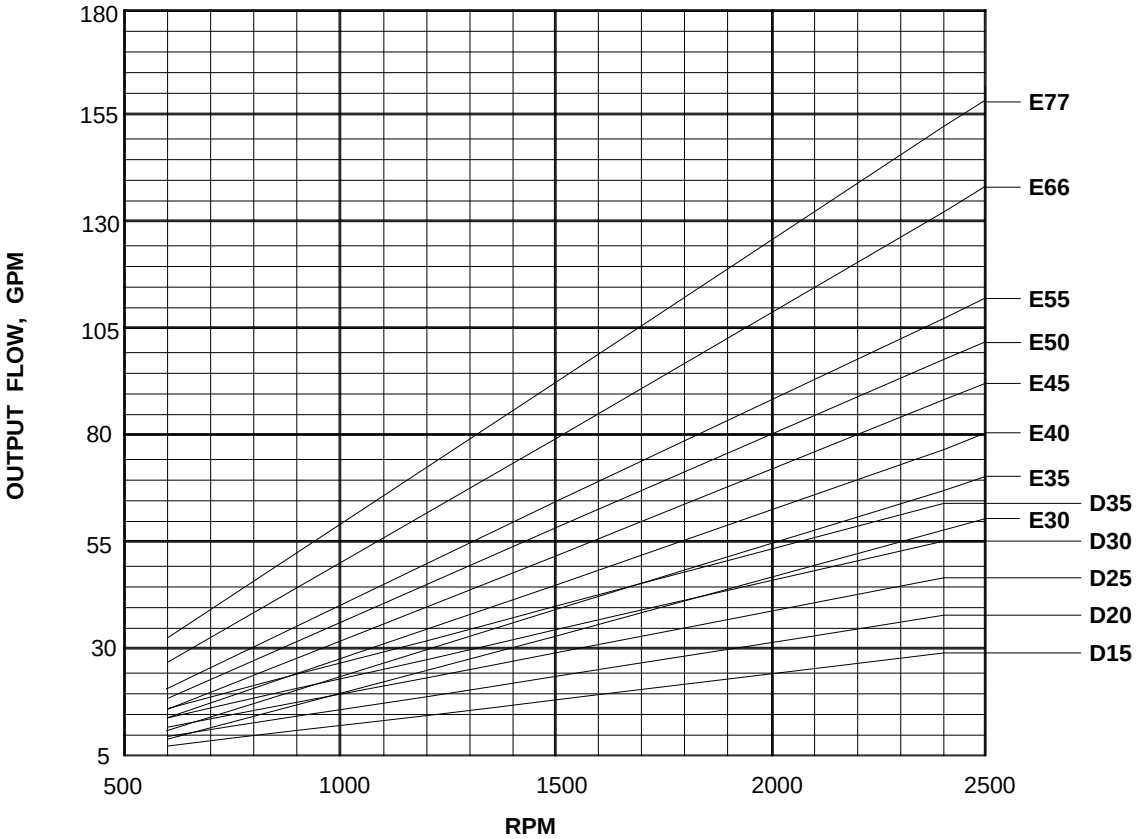


## 'ETD' SERIES PUMP HORSEPOWER IN @ 2500 PSI

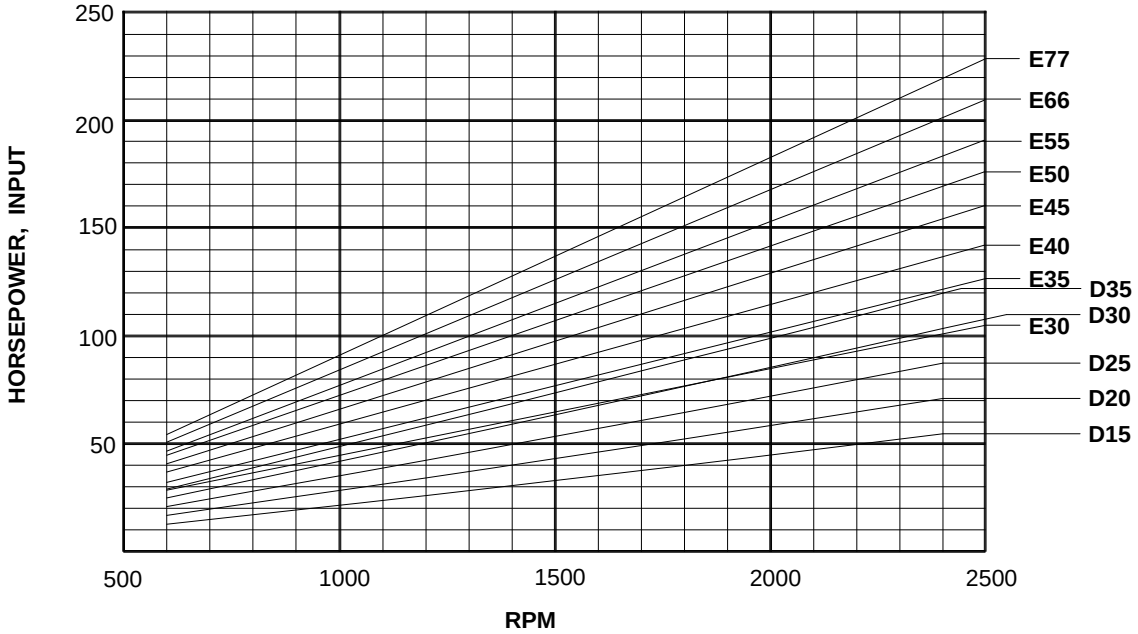


GEARTEK® FLUID POWER PUMPS AND MOTORS

**DIVISION OF HYDRAULIC ANALYSIS, INC.**