GEARTEK®

HYDRAULIC GEAR PUMPS AND MOTORS

# 'RPMC' Series

## SINGLE MOTOR

## SINGLE REVERSIBLE PUMP

## Performance Data

| MODEL SIZE | DISPLACEMENT/REVOLUTION (THEORETICAL) | | | | | IN-LB TORQUE @ 2400 RPM & 2500 PSI | | HP/OUT @ 2400 RPM & 2500 PSI | MAX. PRESSURE | |
|---|---|---|---|---|---|---|---|---|---|---|
| | U.S. GALLONS | CUBIC INCHES | CUBIC CENT. | RPM MIN. | RPM MAX. | START | RUN | | PSI | BAR |
| RPMC45 | .0038 | 0.88 | 14.4 | 600 | 3600 | 241 | 301 | 11 | 3500 | 241 |
| RPMC65 | .0055 | 1.27 | 20.8 | 600 | 3600 | 347 | 434 | 16 | 3500 | 241 |
| RPMC85 | .0072 | 1.66 | 27.2 | 600 | 3400 | 455 | 569 | 22 | 3500 | 241 |
| RPMC100 | .0085 | 1.96 | 32.1 | 600 | 3300 | 535 | 669 | 25 | 3500 | 241 |
| RPMC115 | .0097 | 2.24 | 36.7 | 600 | 3100 | 615 | 769 | 29 | 3000 | 207 |
| RPMC150 | .0127 | 2.93 | 48.1 | 600 | 2800 | 802 | 1003 | 38 | 2500 | 172 |
| RPMC180 | .0152 | 3.51 | 57.5 | 600 | 2500 | 962 | 1203 | 46 | 2500* | 172 |
| RPMC200 | .0169 | 3.90 | 63.9 | 600 | 2200 | 1069 | 1337 | 51 | 2500* | 172 |

* CONSULT FACTORY WITH TYPE APPLICATION
PRESSURES MAY BE LIMITED TO SHAFT TYPE

- CAST IRON THROUGHOUT
- PRESSURES TO 3500 PSI
- FLOWS TO 37 GPM
- HEAVY DUTY SLEEVE TYPE BEARINGS
- DOUBLE VITON® SHAFT SEALS STANDARD
- PRESSURE COMPENSATED THRUST PLATES
- DESIGNED FOR HEAVY DUTY APPLICATIONS
- SINGLE AND MULTI-STAGE CONFIGURATIONS
- VARIOUS SHAFT, FLANGE AND PORT OPTIONS
- PRECISION GEARS MACHINED FROM SOLID BAR STOCK
- COMPATIBLE WITH MOST FIRE RESISTANT FLUIDS
- CONTAMINANT RESISTANT
- COMPUTER DESIGNED AND MANUFACTURED
- QUALITY CERTIFIED
- FLEXIBLE DESIGN FOR NEW OR OEM REPLACEMENTS
- SERVICE SUPPORTED BY DEDICATION AND INVENTORY

P. O. BOX 2160, 1506 FULTON DR.
CORINTH, MISSISSIPPI 38835

Phone: 662/286-2252 Fax: 662/287-6580 E-mail: haisales@geartek.com Http: www.geartek.com

# SHAFTS AVAILABLE

## 1 5/8"-9 TOOTH SPLINE

**AVAILABLE ON 45 THRU 100 SIZES ONLY**
**TORQUE LIMIT 52 FT.-LBS.**

**FLAT ROOT SIDE FIT**

| | |
|---|---|
| DIAMETRAL PITCH | 16/32 |
| PRESSURE ANGLE | 30° |
| NO. OF TEETH | 9 |
| MINOR DIA. | .465-.475 |

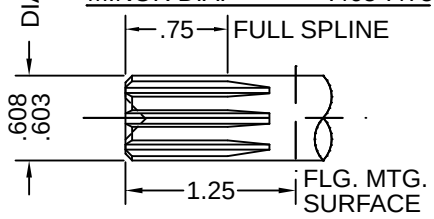


## 2 7/8"-13 TOOTH SPLINE

**TORQUE LIMIT 184 FT.-LBS.**

**FLAT ROOT SIDE FIT**

| | |
|---|---|
| DIAMETRAL PITCH | 16/32 |
| PRESSURE ANGLE | 30° |
| NO. OF TEETH | 13 |
| MINOR DIA. | .722-.733 |

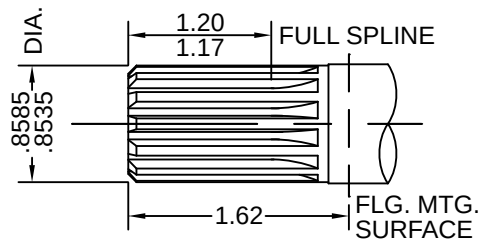


## 5 7/8" STRAIGHT

**TORQUE LIMIT 184 FT.-LBS.**

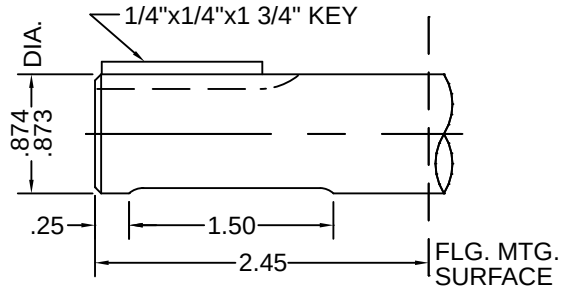


## 6 3/4" STRAIGHT

**AVAILABLE ON 45 THRU 115 SIZES ONLY**
**TORQUE LIMIT 105 FT.-LBS.**

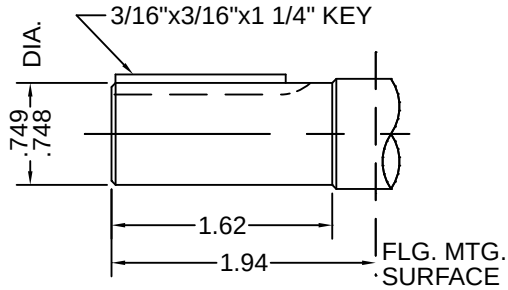


# PORTS AVAILABLE

## 1 REAR PORTED SAE STRAIGHT THREAD

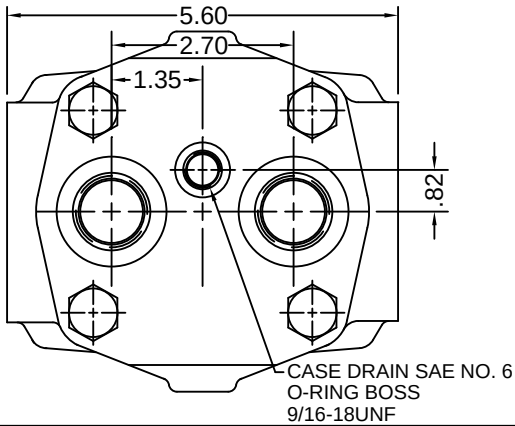


## 3 SAE 4-BOLT CONNECTOR

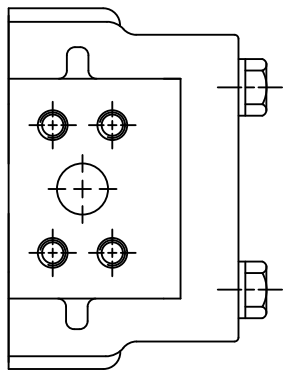

## 5 SIDE PORTED SAE STRAIGHT THREAD

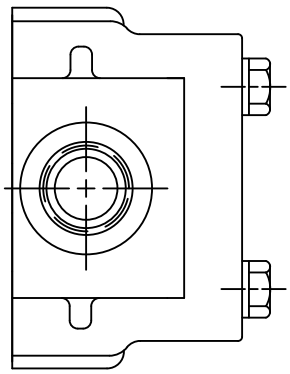

## PORT SIZES

| SIZE | FOR CODE 1 & 5 PORTS BOTH SIDES SAE STRAIGHT THREAD O-RING BOSS | FOR CODE 3 PORTS BOTH SIDES SAE 4-BOLT CODE 61 |
|---|---|---|
| RPMC45 | NO. 12 1 1/16-12UN-2B | 3/4" |
| RPMC65 | NO. 16 1 5/16-12UN-2B | 1" |
| RPMC85 | NO. 16 1 5/16-12UN-2B | 1" |
| RPMC100 | NO. 16 1 5/16-12UN-2B | 1" |
| RPMC115 | NO. 20 1 5/8-12UN-2B | 1 1/4" |
| RPMC150 | NO. 20 1 5/8-12UN-2B | 1 1/4" |
| RPMC180 | NO. 20 1 5/8-12UN-2B | 1 1/4" |
| RPMC200 | NO. 20 1 5/8-12UN-2B | 1 1/4" |



UNLESS OTHERWISE SPECIFIED, ALL LINEAR DIMENSIONS ARE IN INCHES.

# FLANGES AVAILABLE

## A — SAE 2 BOLT 'A' FLANGE

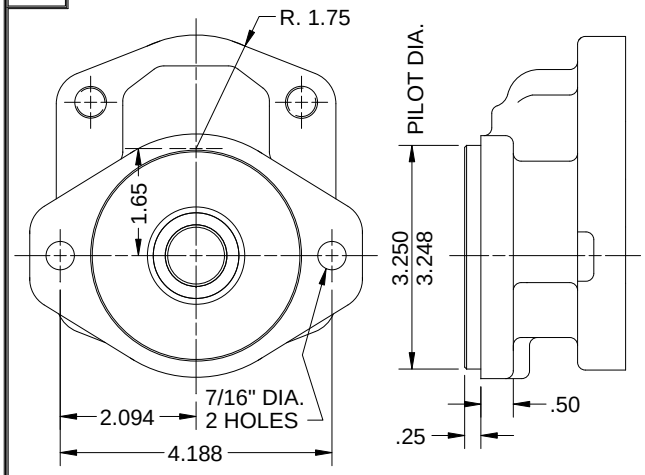


## B — SAE 'B' FLANGE

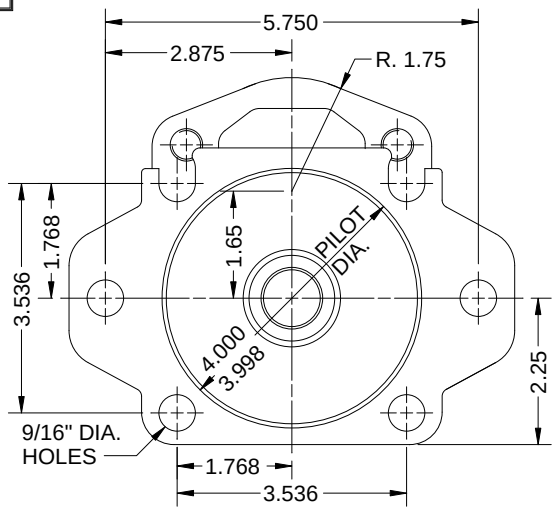


## R — 4 BOLT ROUND FLANGE

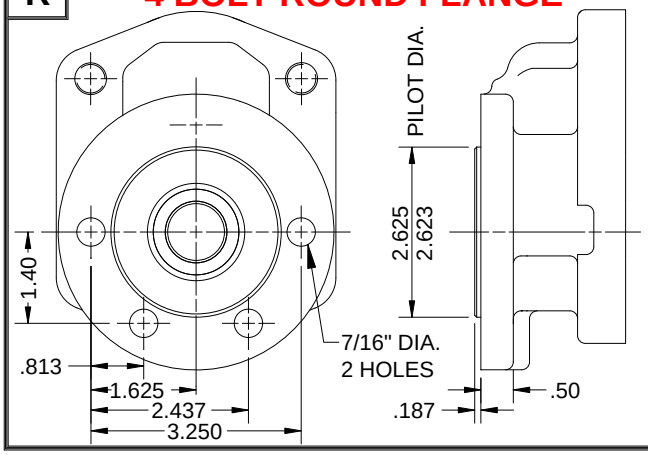


### MOUNTING DIMENSIONS

| SIZE | A | B |
|---|---|---|
| RPMC45 | 1.06 | 2.98 |
| RPMC65 | 1.06 | 3.20 |
| RPMC85 | 1.06 | 3.41 |
| RPMC100 | 1.06 | 3.57 |
| RPMC115 | 1.25 | 3.73 |
| RPMC150 | 1.25 | 4.10 |
| RPMC180 | 1.25 | 4.42 |
| RPMC200 | 1.25 | 4.64 |

FOR METRIC DIMENSIONS
MULTIPLY 25.4 X IN. = mm

# DIMENSIONAL DATA

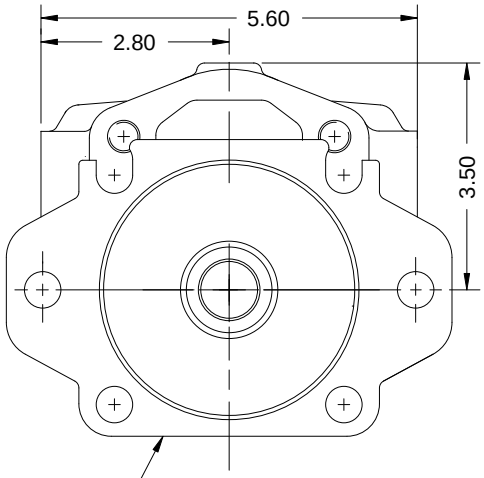


OPTIONAL:
SEE FLANGES

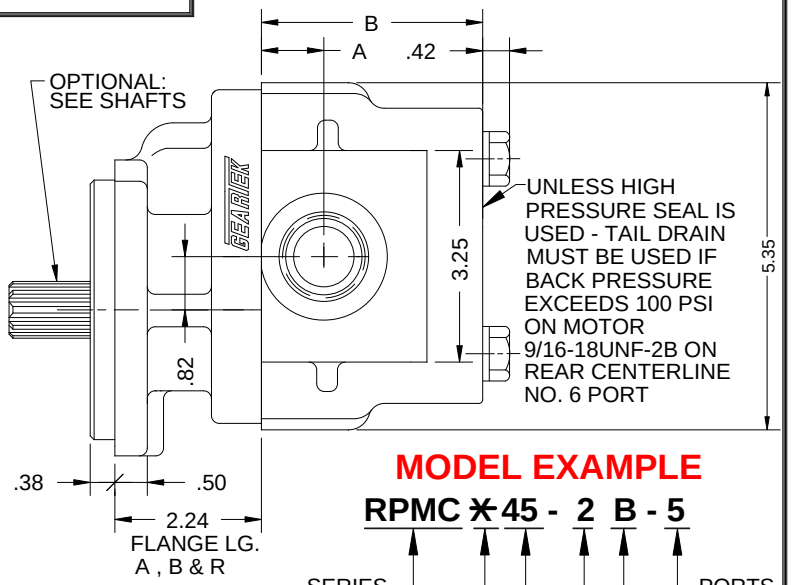


UNLESS HIGH PRESSURE SEAL IS USED - TAIL DRAIN MUST BE USED IF BACK PRESSURE EXCEEDS 100 PSI ON MOTOR
9/16-18UNF-2B ON REAR CENTERLINE NO. 6 PORT

OTHER PORT TYPES AVAILABLE
CONSULT FACTORY

# MODEL EXAMPLE

**RPMC ✳ 45 - 2 B - 5**

- RPMC — SERIES
- ✳ — OPTIONAL: SPECIFY CODE 'H' THIS AREA FOR HIGH PRESSURE SEAL OTHERWISE: LEAVE BLANK
- 45 — SIZE
- 2 — SHAFT
- B — FLANGE
- 5 — PORTS

✳ THE OPTIONAL HIGH PRESSURE SEAL MAY BE USED WHEN DRAIN LINES ARE NOT PRACTICAL.
FOR SYSTEMS TOLERATING A DRAIN LINE, ELIMINATE THE 'H' FROM THE MODEL CODE.



UNLESS OTHERWISE SPECIFIED, ALL LINEAR DIMENSIONS ARE IN INCHES.

# GEARTEK MC45 MOTOR PERFORMANCE

SAE 10W oil @ 150 degrees F

(Typical)

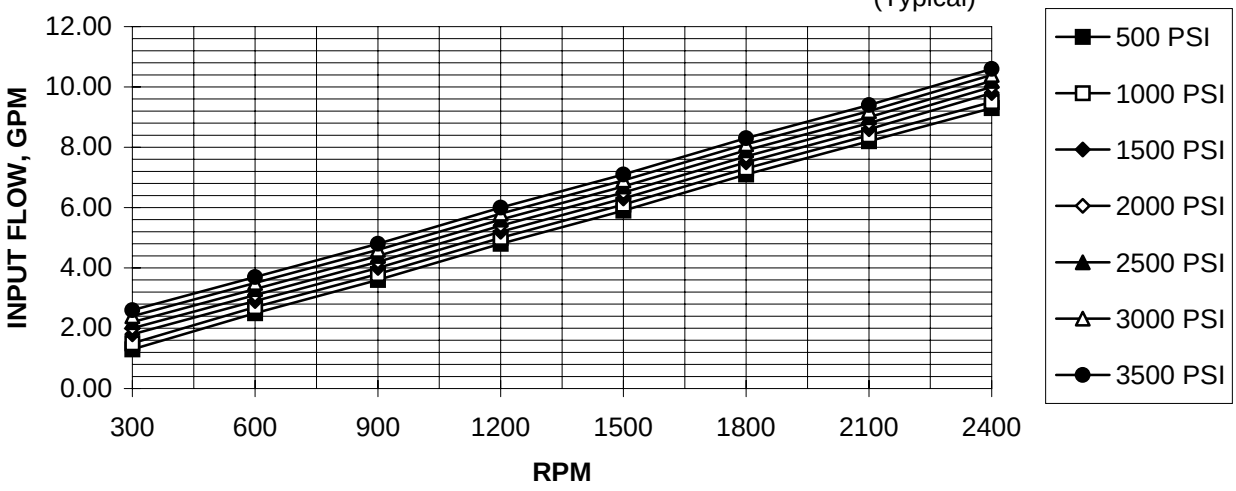


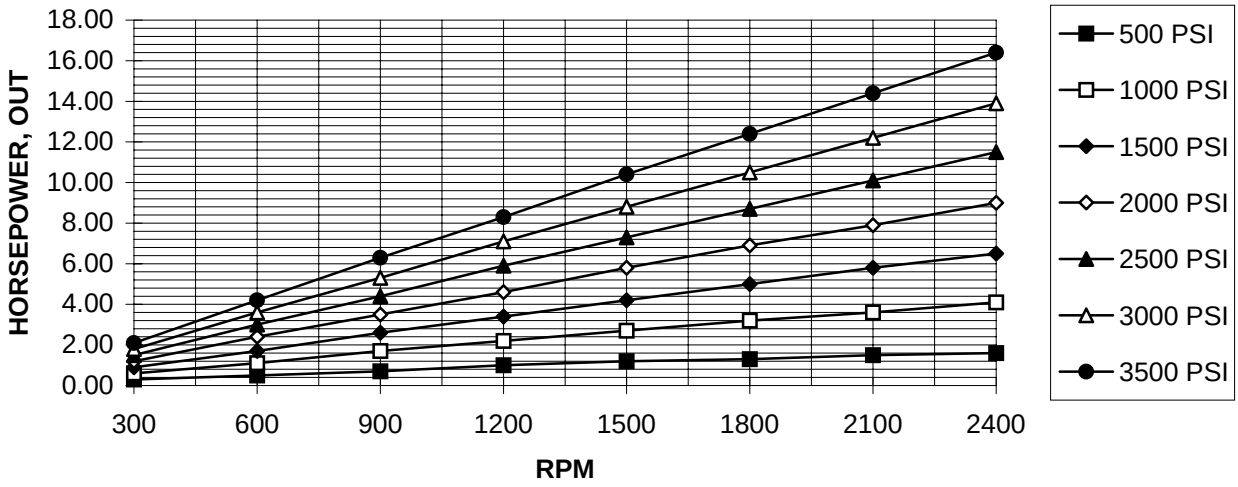


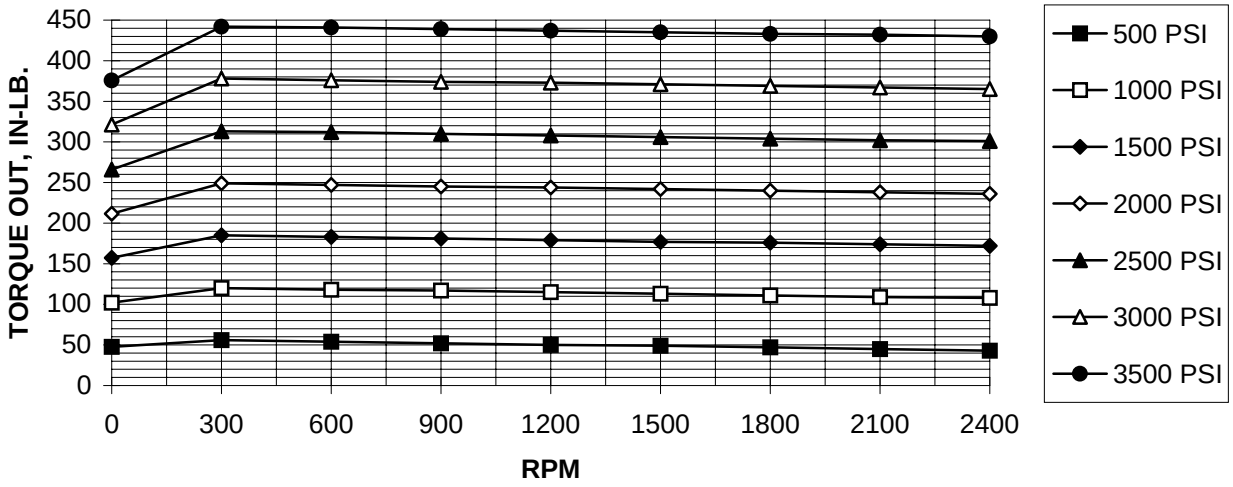

# GEARTEK MC65 MOTOR PERFORMANCE

SAE 10W oil @ 150 degrees F

(Typical)

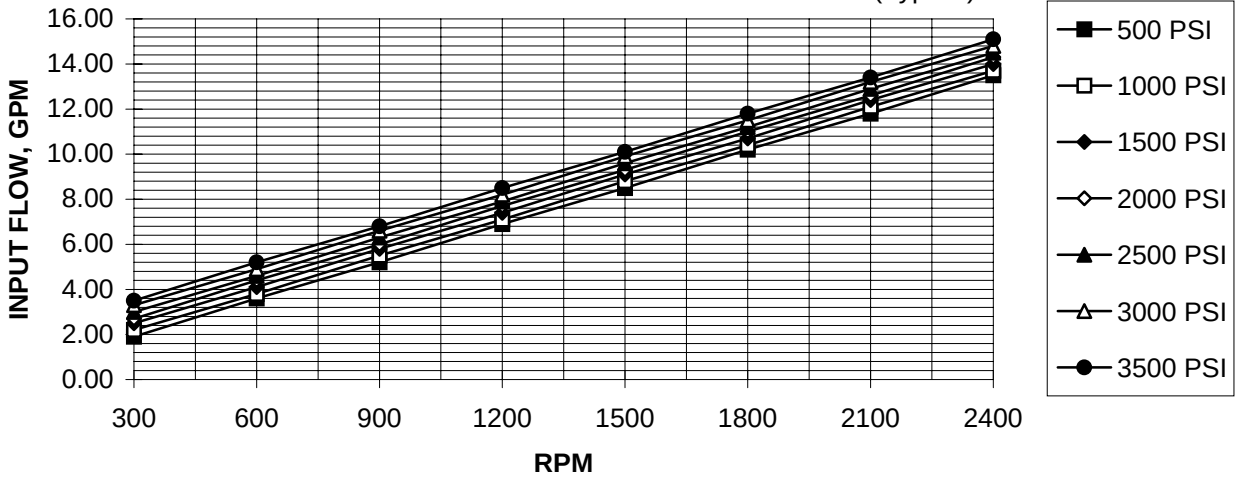


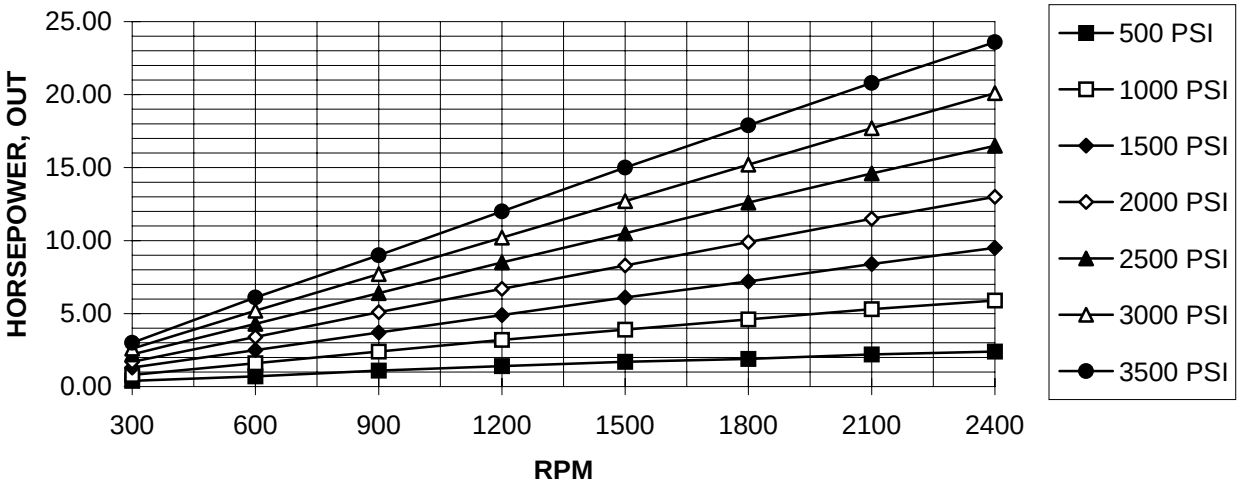


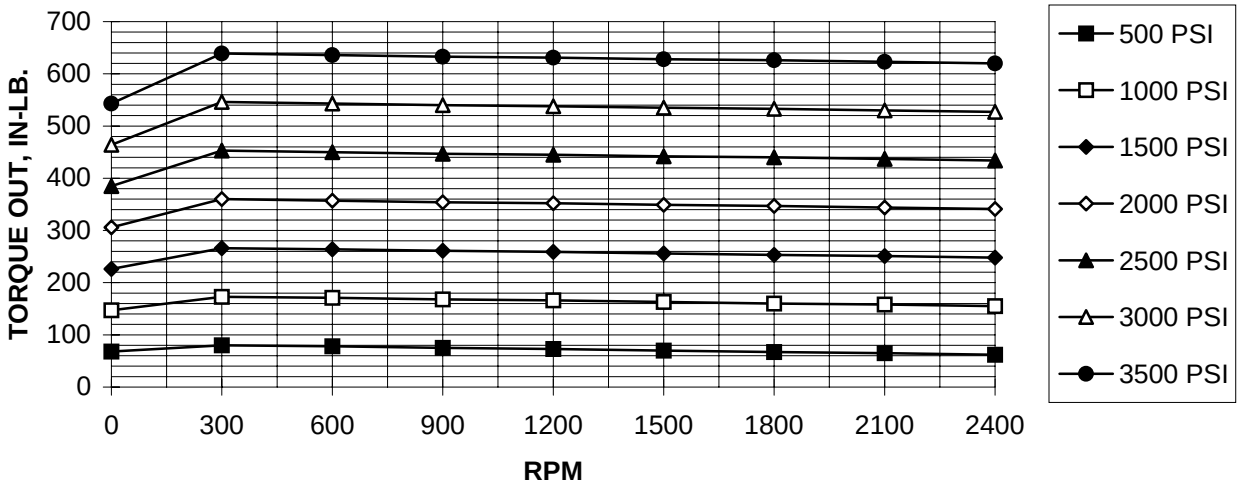

# GEARTEK MC85 MOTOR PERFORMANCE

SAE 10W oil @ 150degrees F

(Typical)

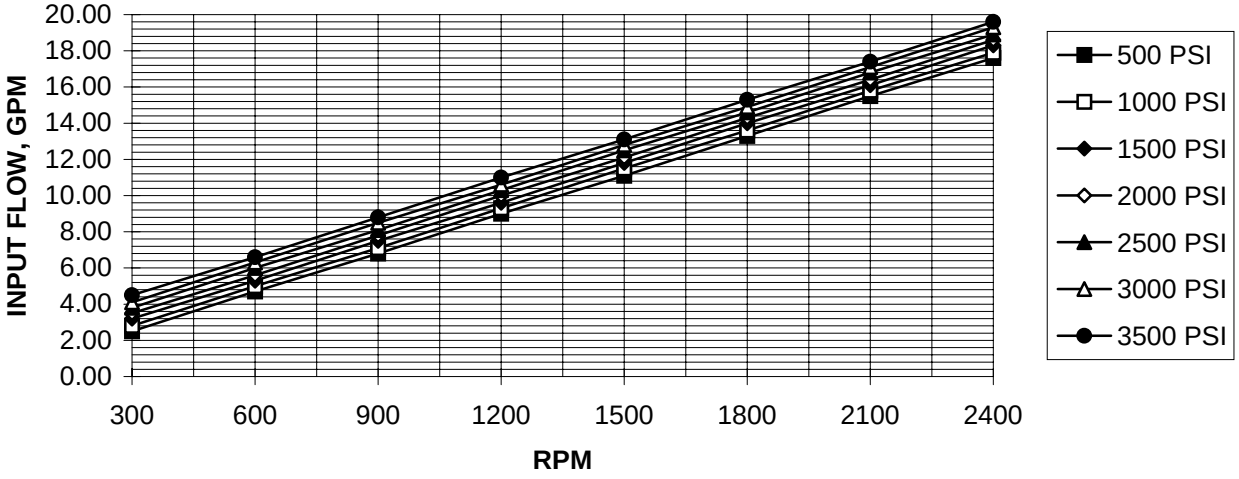


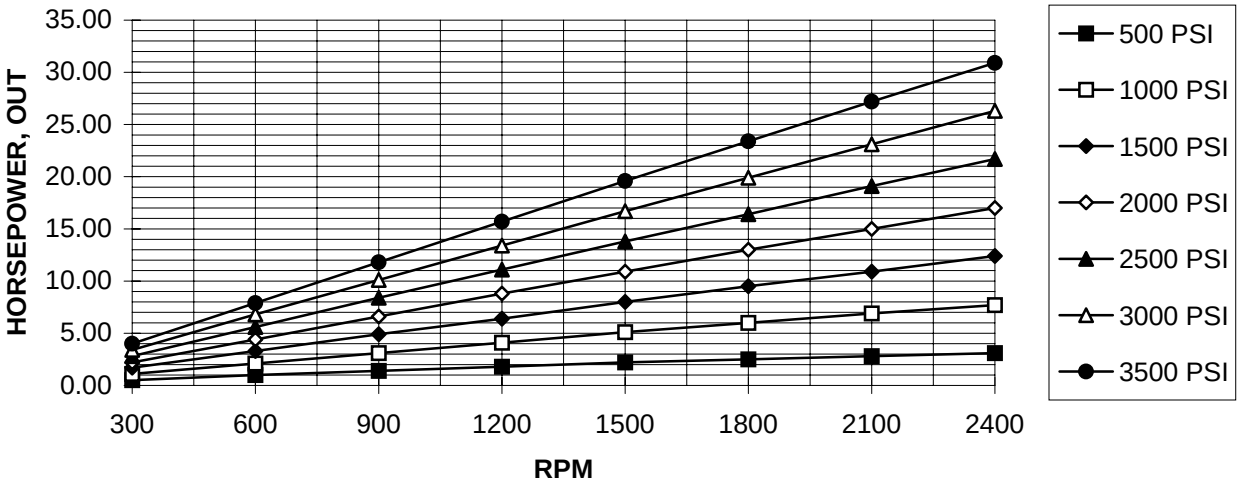


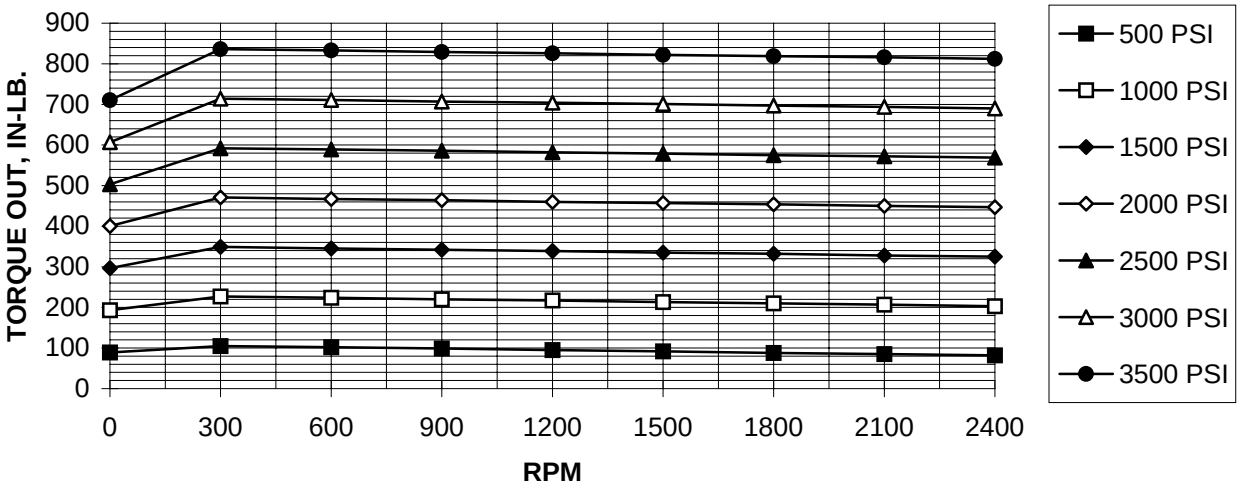

# GEARTEK MC100 MOTOR PERFORMANCE

SAE 10W oil @ 150degrees F

(Typical)

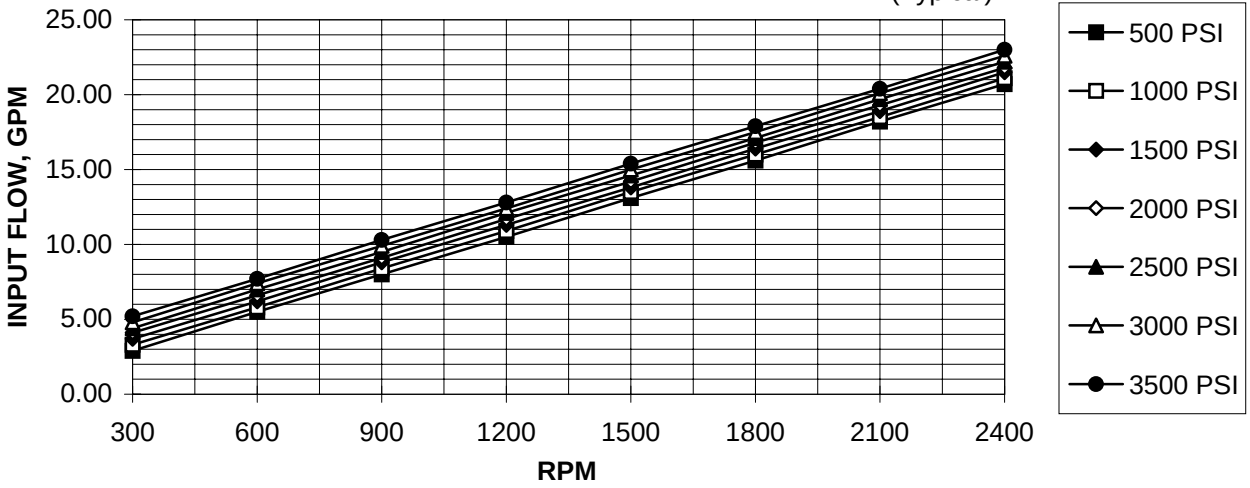


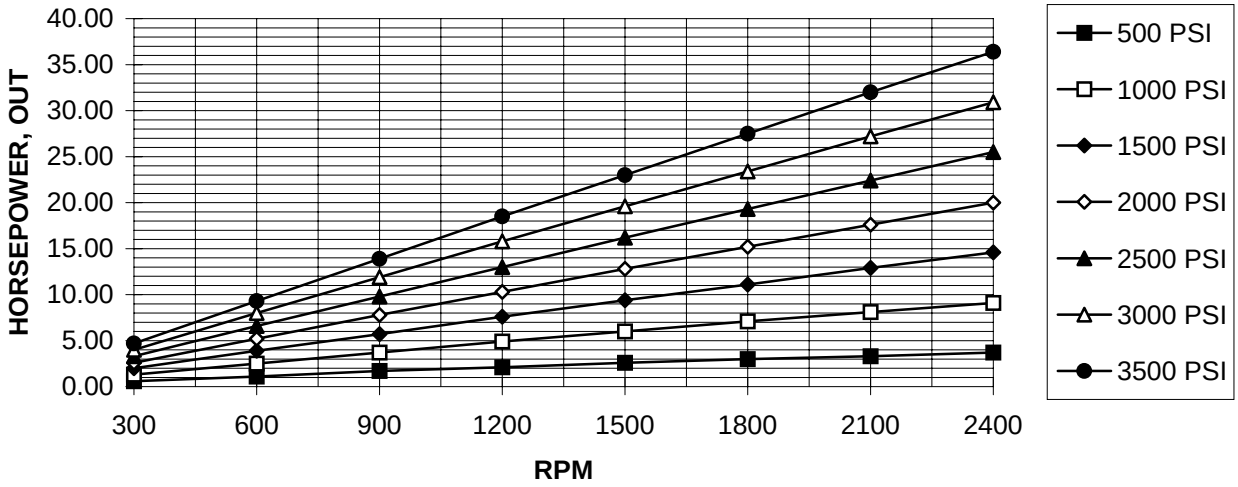


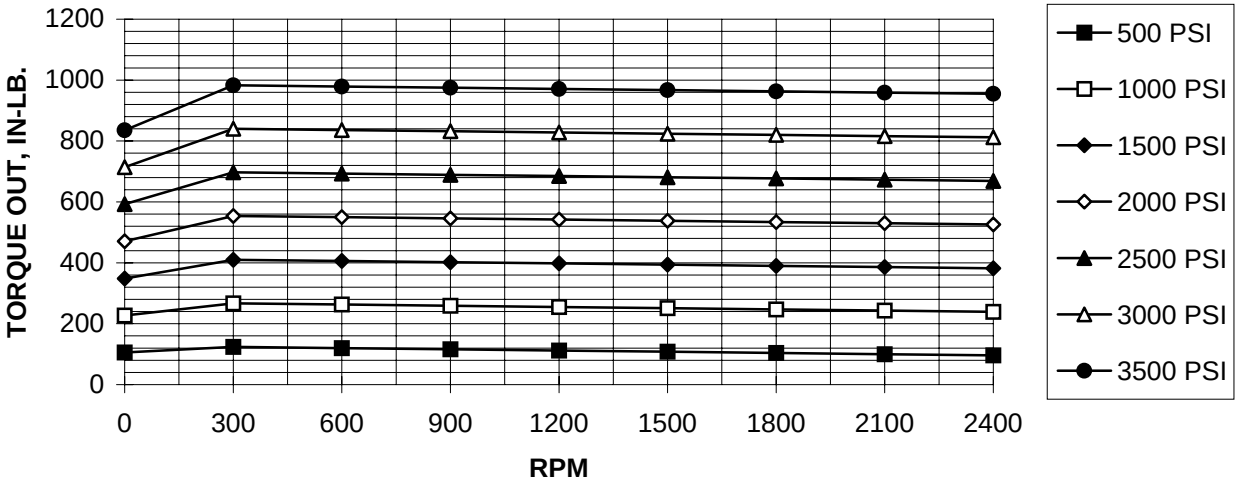

# GEARTEK MC115 MOTOR PERFORMANCE

SAE 10W oil @ 150 degrees F

(Typical)

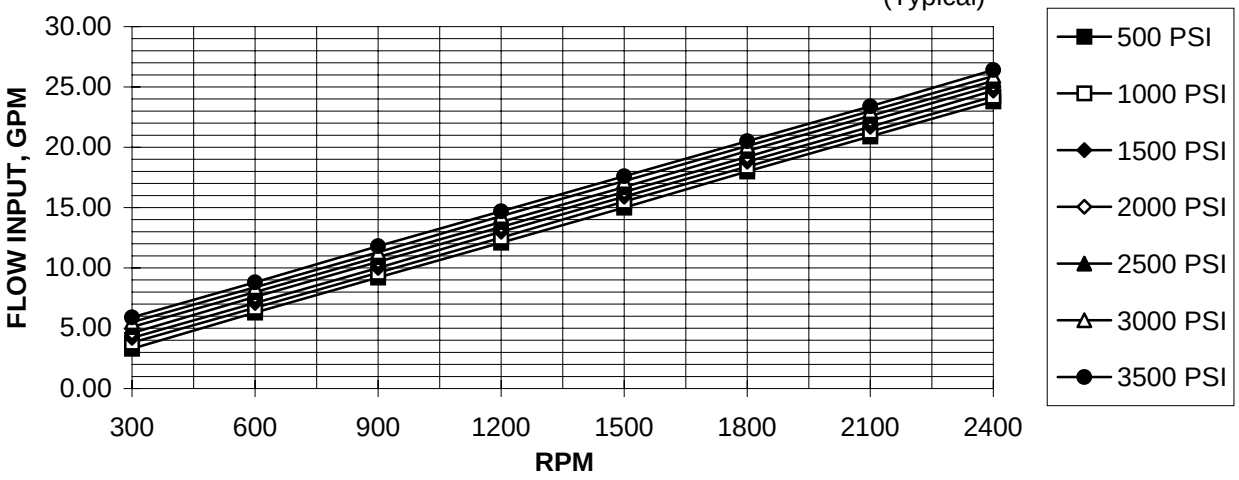


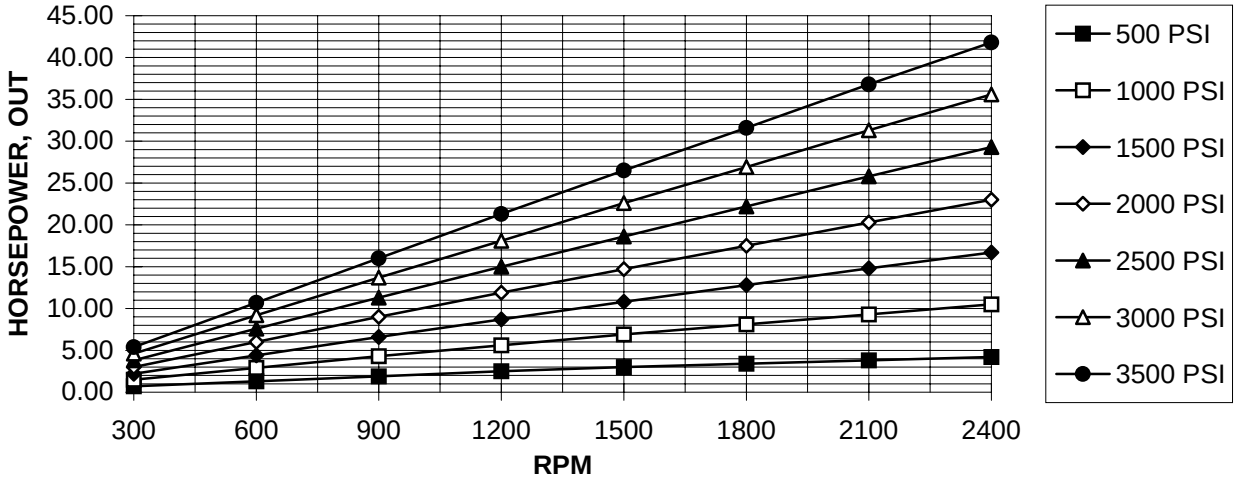


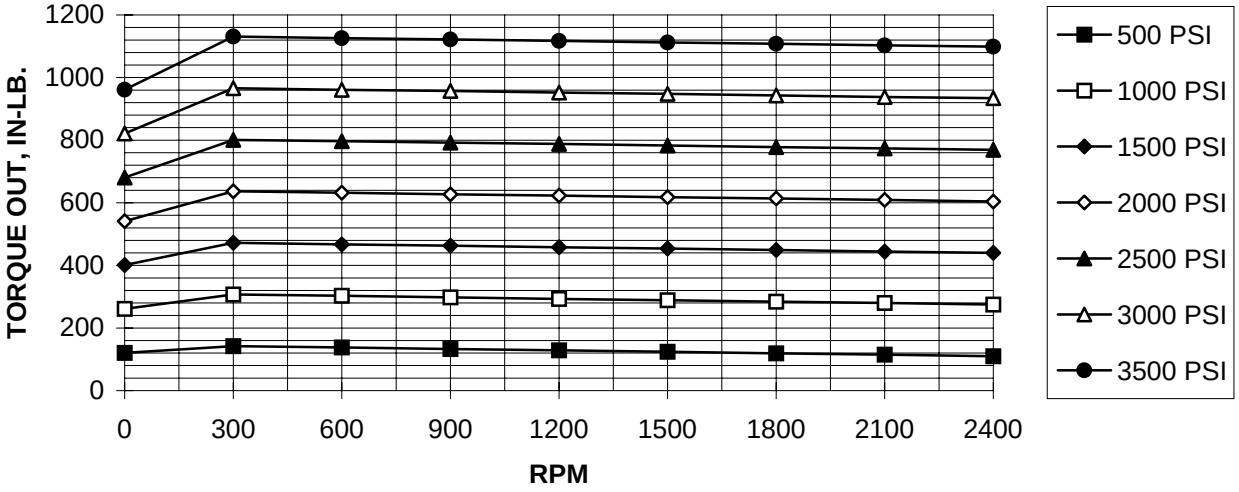

# GEARTEK MC150 MOTOR PERFORMANCE

SAE 10W oil @ 150 degrees F

(Typical)

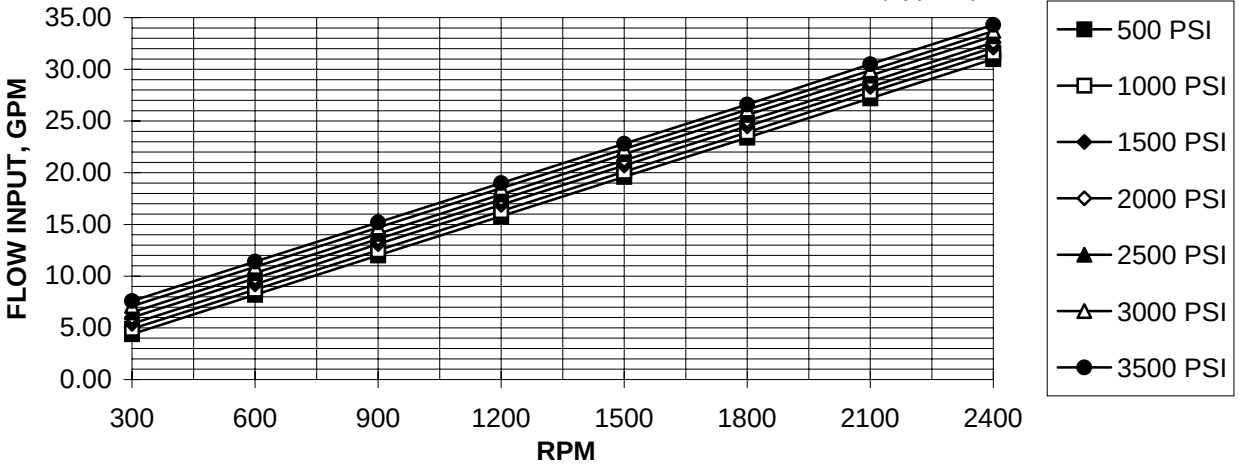


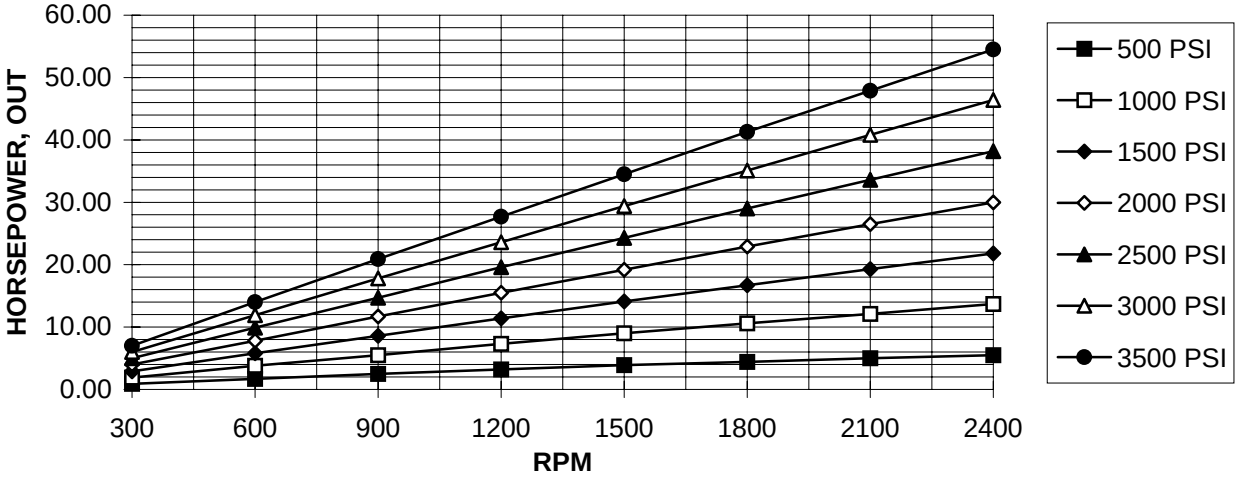


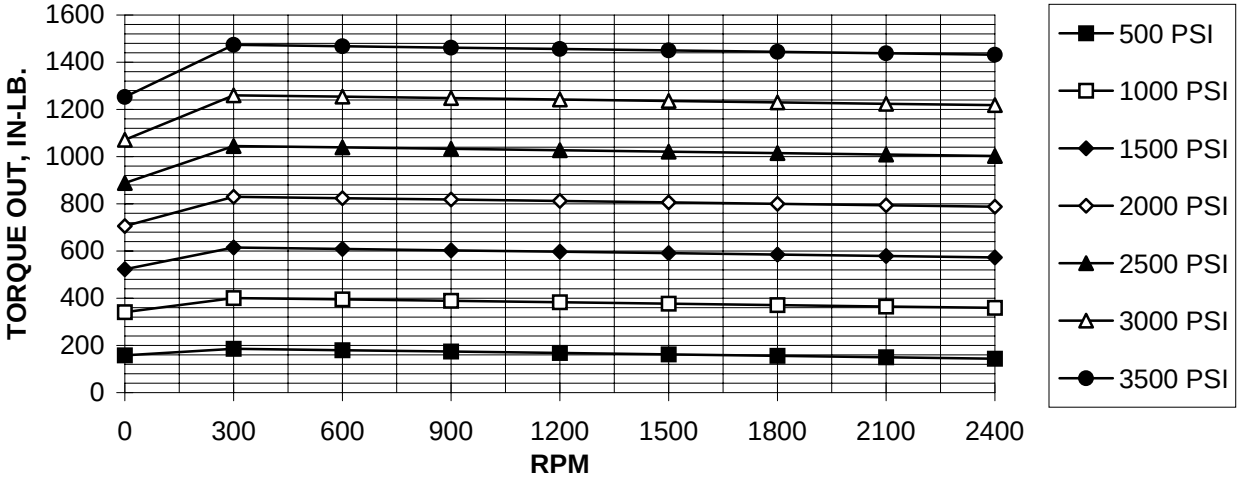

# GEARTEK MC200 MOTOR PERFORMANCE

SAE 10W oil @ 150 degrees F

(Typical)

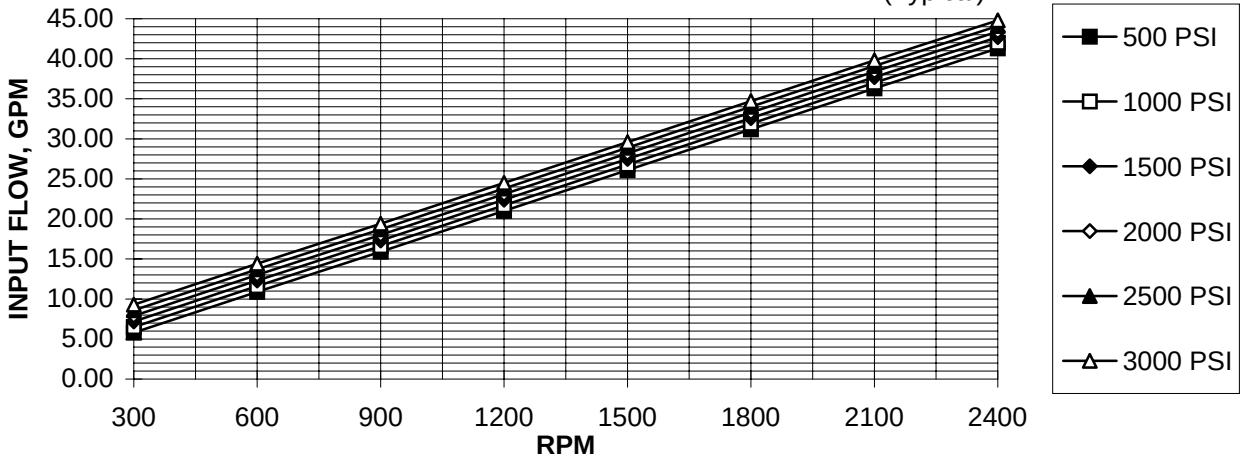


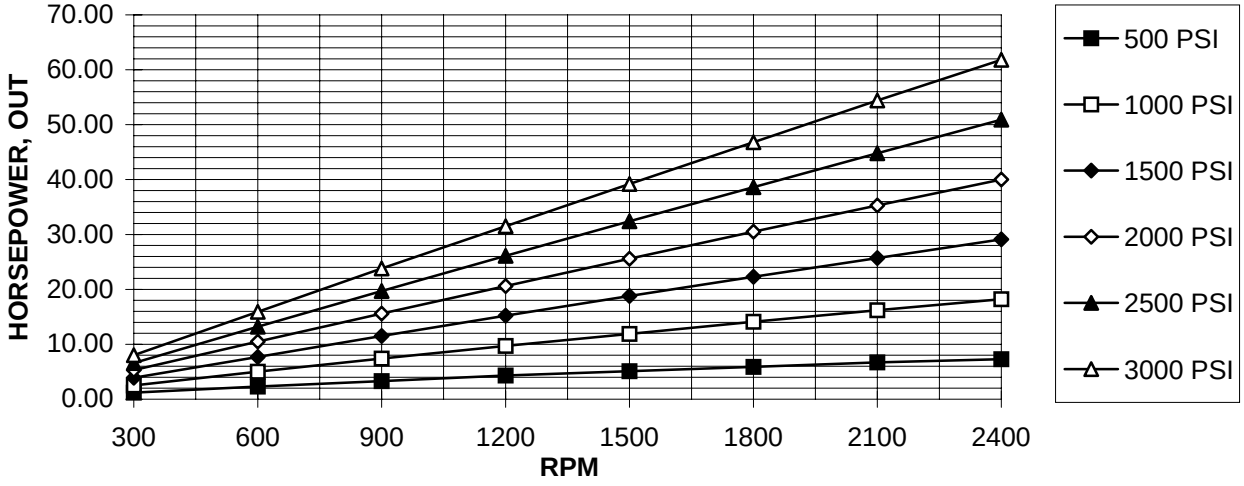


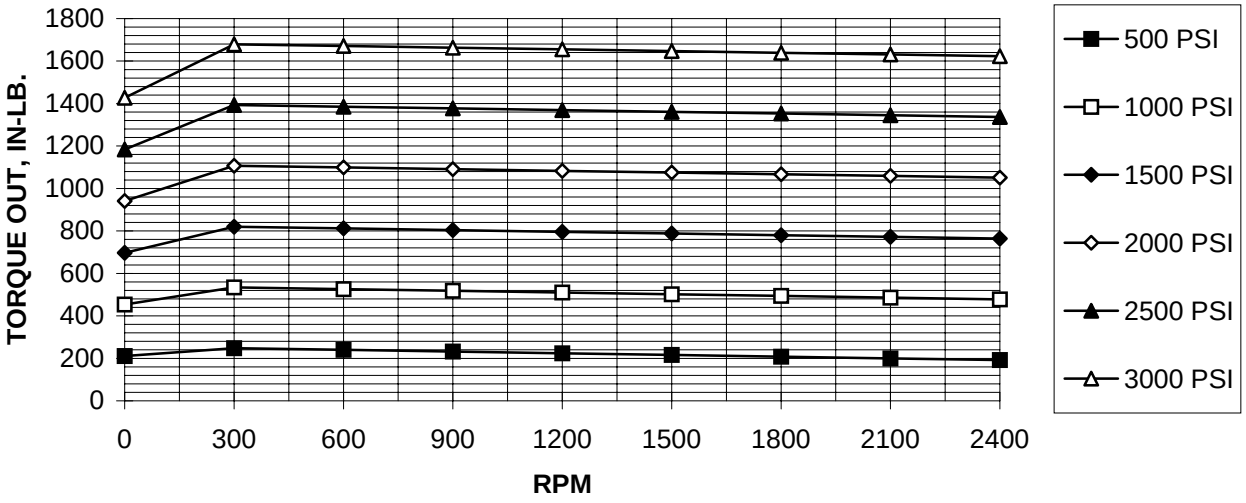

# GEARTEK MC180 MOTOR PERFORMANCE

SAE 10W oil @ 150 degrees F
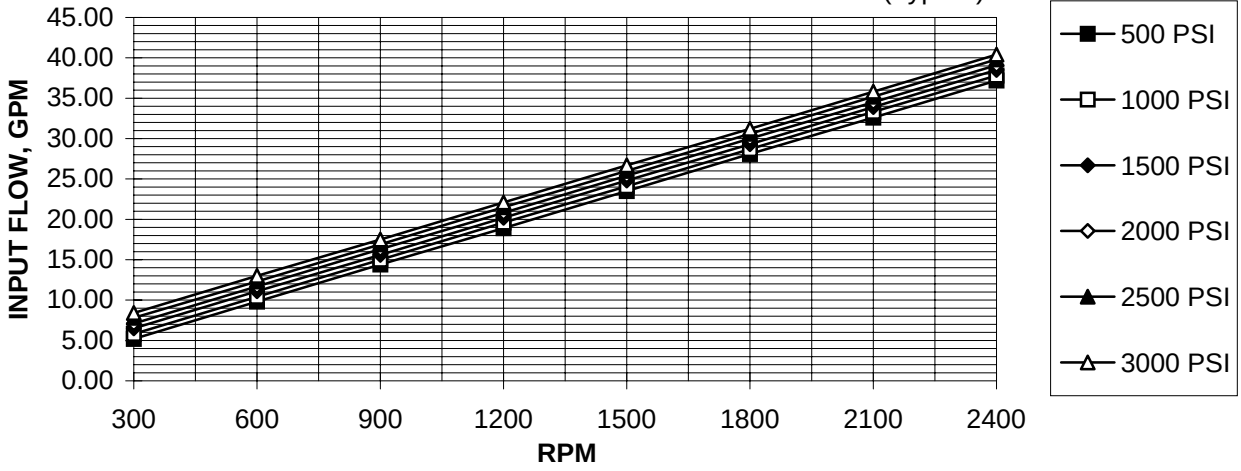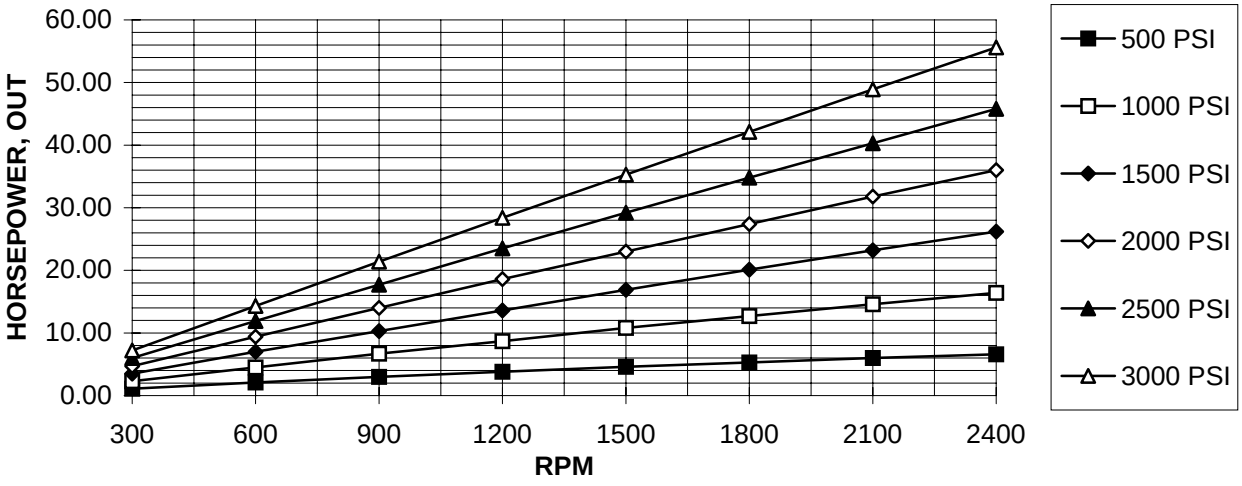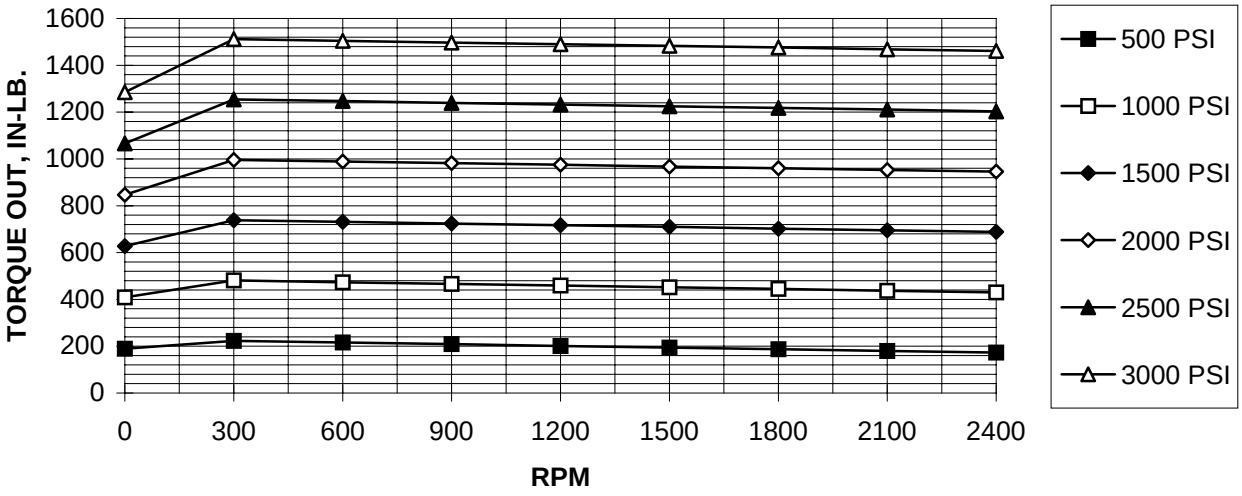
(Typical)