GEARTEK®

HYDRAULIC GEAR PUMPS AND MOTORS

# 'C' Series

## *3 SECTION PUMP*

## Performance Data

| MODEL SIZE | DISPLACEMENT/REVOLUTION (THEORETICAL) | | | MAXIMUM PRESSURE | | MAXIMUM SPEED (RPM) |
|---|---|---|---|---|---|---|
| | U.S. GALLONS | CUBIC INCHES | CUBIC CENT. | PSI | BAR | |
| C45 | .0038 | 0.88 | 14.4 | 3500 | 241 | 3600 |
| C65 | .0055 | 1.27 | 20.8 | 3500 | 241 | 3600 |
| C85 | .0072 | 1.66 | 27.2 | 3500 | 241 | 3400 |
| C100 | .0085 | 1.96 | 32.1 | 3500 | 241 | 3300 |
| C115 | .0097 | 2.24 | 36.7 | 3000 | 207 | 3100 |
| C150 | .0127 | 2.93 | 48.1 | 2500 | 172 | 2800 |
| C180 | .0152 | 3.51 | 57.5 | 2500* | 172 | 2500 |
| C200 | .0169 | 3.90 | 63.9 | 2500* | 172 | 2200 |

* CONSULT FACTORY WITH TYPE APPLICATION
PRESSURES MAY BE LIMITED TO SHAFT TYPE

- CAST IRON THROUGHOUT
- PRESSURES TO 3500 PSI
- FLOWS TO 37 GPM / SECTION
- HEAVY DUTY SLEEVE TYPE BEARINGS
- DOUBLE VITON® SHAFT SEALS STANDARD
- PRESSURE COMPENSATED THRUST PLATES
- DESIGNED FOR HEAVY DUTY APPLICATIONS
- SINGLE AND MULTI-STAGE CONFIGURATIONS
- VARIOUS SHAFT, FLANGE AND PORT OPTIONS
- PRECISION GEARS MACHINED FROM SOLID BAR STOCK
- COMPATIBLE WITH MOST FIRE RESISTANT FLUIDS
- CONTAMINANT RESISTANT
- COMPUTER DESIGNED AND MANUFACTURED
- QUALITY CERTIFIED
- FLEXIBLE DESIGN FOR NEW OR OEM REPLACEMENTS
- SERVICE SUPPORTED BY DEDICATION AND INVENTORY

P. O. BOX 2160, 1506 FULTON DR.
CORINTH, MISSISSIPPI 38835

Phone: 662/286-2252 Fax: 662/287-6580 E-mail: haisales@geartek.com Http: www.geartek.com

## SHAFTS AVAILABLE

### 2 — 7/8"-13 TOOTH SPLINE

**TORQUE LIMIT 184 FT.-LBS.**

**FLAT ROOT SIDE FIT**

| | |
|---|---|
| DIAMETRAL PITCH | 16/32 |
| PRESSURE ANGLE | 30° |
| NO. OF TEETH | 13 |
| MINOR DIA. | .722-.733 |

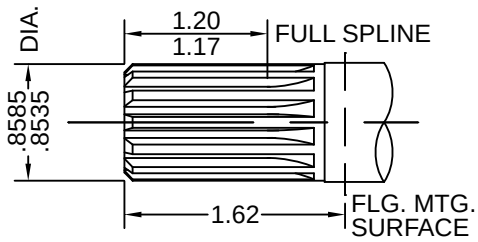


### 5 — 7/8" STRAIGHT

**TORQUE LIMIT 184 FT.-LBS.**

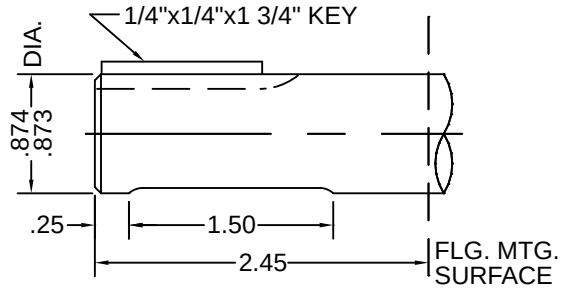


## PORTS AVAILABLE

### 3 — SAE 4-BOLT CONNECTOR

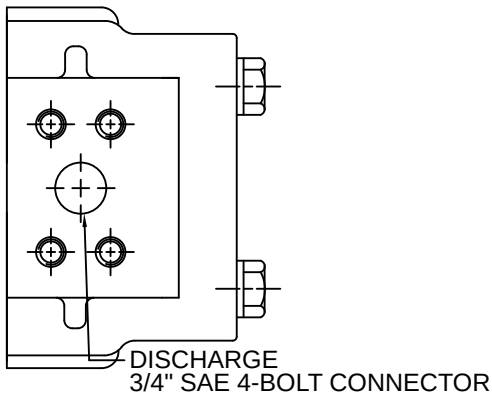


### 5 — SIDE PORTED SAE STRAIGHT THREAD

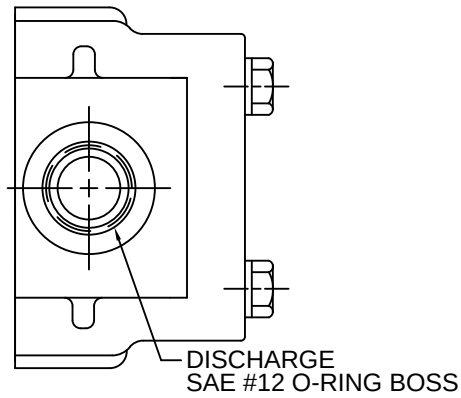


## FLANGES AVAILABLE

### A — SAE 2 BOLT 'A' FLANGE

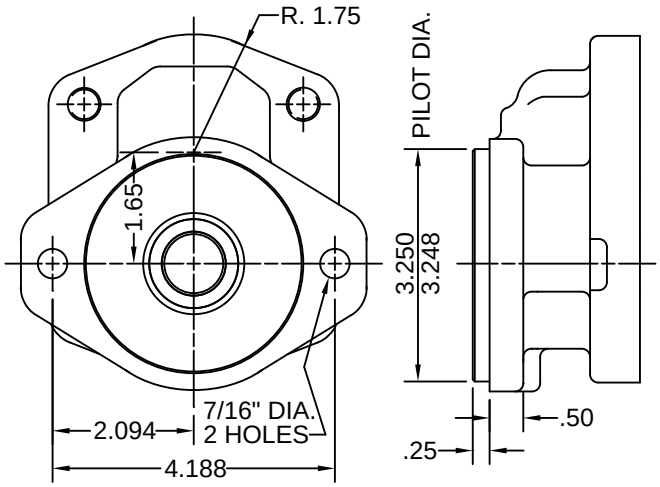


### B — SAE 'B' FLANGE

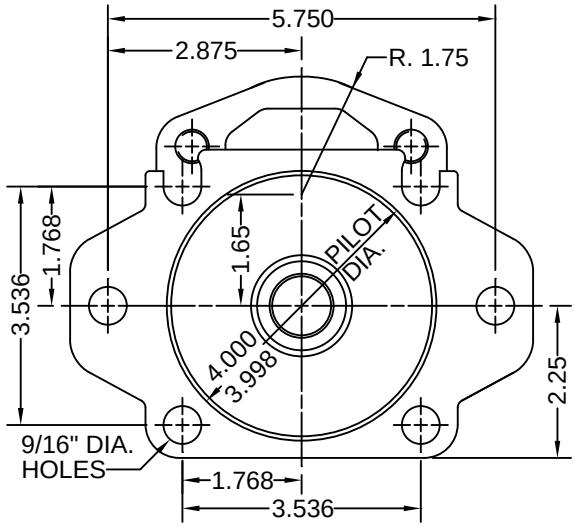




UNLESS OTHERWISE SPECIFIED, ALL LINEAR DIMENSIONS ARE IN INCHES.

# DIMENSIONAL DATA

## MOUNTING DIMENSIONS

| SIZE | A | B | C |
|---|---|---|---|
| C45 | 1.06 | 2.98 | 2.32 |
| C65 | 1.06 | 3.20 | 2.54 |
| C85 | 1.06 | 3.41 | 2.75 |
| C100 | 1.06 | 3.57 | 2.91 |
| C115 | 1.25 | 3.73 | 3.07 |
| C150 | 1.25 | 4.10 | 3.44 |
| C180 | 1.25 | 4.42 | 3.76 |
| C200 | 1.25 | 4.64 | 3.98 |

FOR METRIC DIMENSIONS
MULTIPLY 25.4 X IN. = mm

OTHER PORT TYPES AVAILABLE
CONSULT FACTORY

## MODEL EXAMPLE

**C 85-45-45 R - 2 B - 5 5 5**

- C — SERIES
- 85-45-45 — SIZE
- R — ROTATION R=CLOCKWISE L=COUNTERCLOCKWISE
- 2 — SHAFT
- B — FLANGE
- 5 5 5 — PORTS (DISCHARGE)

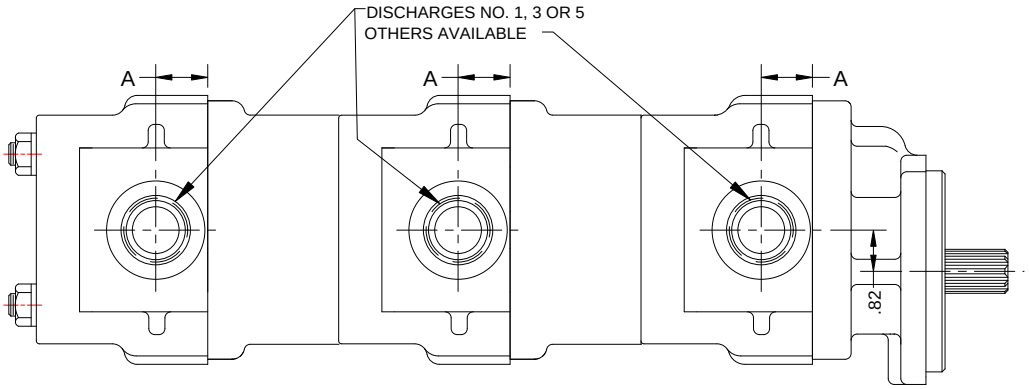


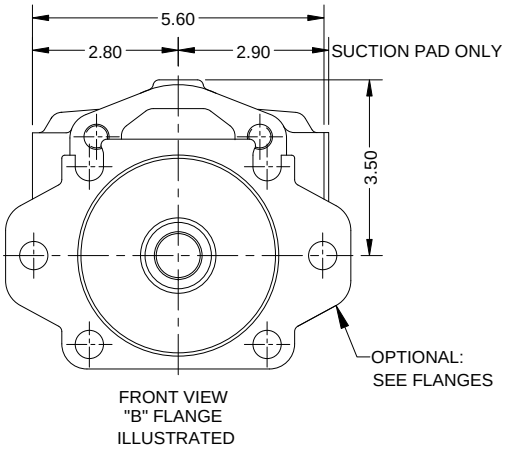


FRONT VIEW
"B" FLANGE
ILLUSTRATED

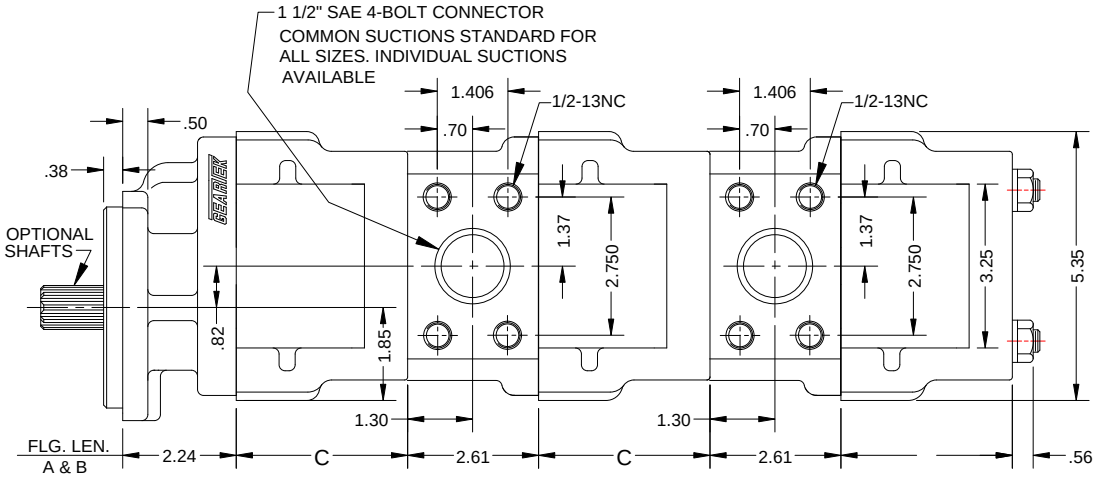


UNLESS OTHERWISE SPECIFIED, ALL LINEAR DIMENSIONS ARE IN INCHES.

# TYPICAL PERFORMANCE DATA

SAE 10W oil @ 150 DEGREES FAHRENHEIT
(150 SSU)

## 'C' Series Typical Pump Flow @ 2500 PSI

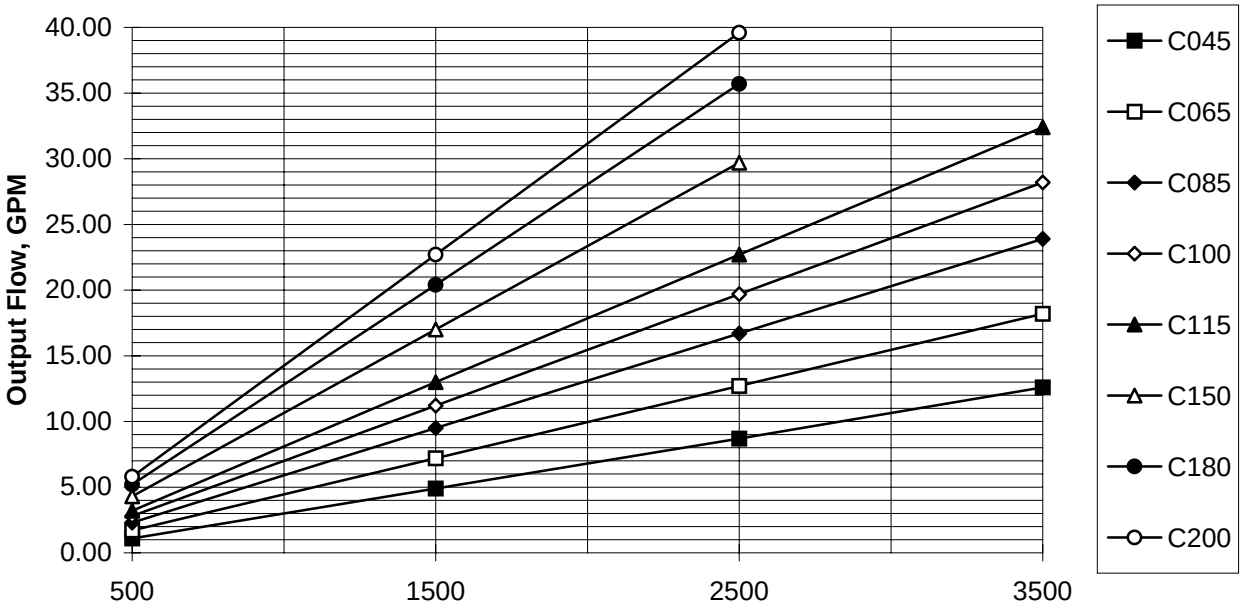


## 'C' Series Pump Horsepower In @ 2500 PSI

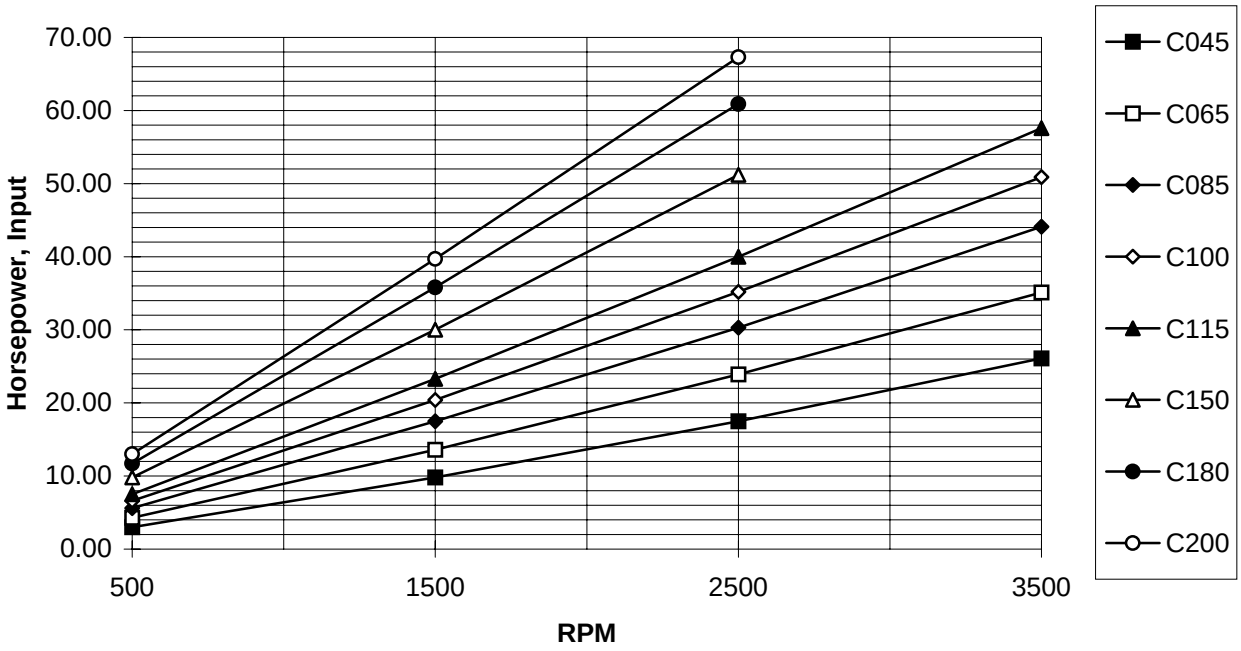


GEARTEK® FLUID POWER PUMPS AND MOTORS

DIVISION OF HYDRAULIC ANALYSIS, INC.