GEARTEK®

HYDRAULIC GEAR PUMPS AND MOTORS

# 'ME' Series

## SINGLE MOTOR
## BI-DIRECTIONAL

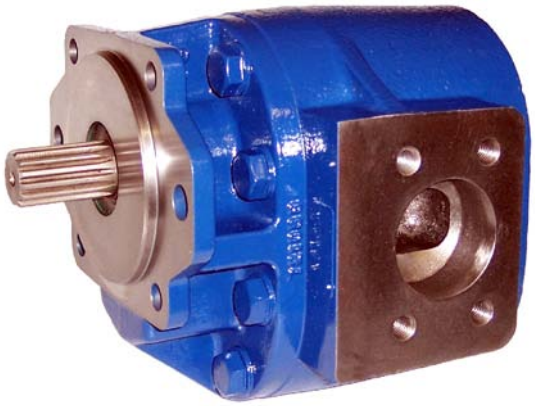

## Performance Data

| MODEL SIZE | DISPLACEMENT/REVOLUTION (THEORETICAL) | | | MIN. RPM | MAX. RPM | MAXIMUM PRESSURE | | IN/LB. TORQUE @ 2500 PSI | | HP @ 2500 RPM 2500 PSI |
|---|---|---|---|---|---|---|---|---|---|---|
| | U.S. GALLONS | CUBIC INCHES | CUBIC CENT. | | | PSI | BAR | START | RUN | |
| ME30 | .0258 | 5.98 | 98.0 | 600 | 2500 | 2500 | 172 | 1520 | 2181 | 74 |
| ME35 | .0300 | 6.93 | 113.5 | 600 | 2500 | 2500 | 172 | 1800 | 2561 | 90 |
| ME40 | .0342 | 7.90 | 129.4 | 600 | 2500 | 2500 | 172 | 2050 | 2940 | 105 |
| ME45 | .0386 | 8.92 | 146.2 | 600 | 2500 | 2500 | 172 | 2350 | 3320 | 124 |
| ME50 | .0427 | 9.86 | 161.6 | 600 | 2500 | 2500 | 172 | 2950 | 3600 | 132 |
| ME55 | .0470 | 10.86 | 178.0 | 600 | 2500 | 2500 | 172 | 3500 | 4000 | 150 |
| ME66 | .0570 | 13.17 | 215.9 | 600 | 2500 | 2500 | 172 | 4400 | 4900 | 170 |
| ME77 | .0658 | 15.20 | 249.2 | 600 | 2500 | 2500 | 172 | 4550 | 5500 | 200 |
| ME95 | .0819 | 18.91 | 309.9 | 600 | 2000 | 2000 | 138 | 4996 | 6019 | 203 |

- CAST IRON THROUGHOUT
- PRESSURES TO 4000 PSI
- FLOWS TO 204 GPM
- HEAVY DUTY SLEEVE TYPE BEARINGS
- DOUBLE VITON® SHAFT SEALS STANDARD
- PRESSURE COMPENSATED THRUST PLATES
- DESIGNED FOR HEAVY DUTY APPLICATIONS
- SINGLE AND MULTI-STAGE CONFIGURATIONS
- VARIOUS SHAFT, FLANGE AND PORT OPTIONS
- PRECISION GEARS MACHINED FROM SOLID BAR STOCK
- COMPATIBLE WITH MOST FIRE RESISTANT FLUIDS
- CONTAMINANT RESISTANT
- COMPUTER DESIGNED AND MANUFACTURED
- QUALITY CERTIFIED
- FLEXIBLE DESIGN FOR NEW OR OEM REPLACEMENTS
- SERVICE SUPPORTED BY DEDICATION AND INVENTORY

P. O. BOX 2160, 1506 FULTON DR.
CORINTH, MISSISSIPPI 38835

Phone: 662/286-2252 Fax: 662/287-6580 E-mail: haisales@geartek.com Http: www.geartek.com

## SHAFTS AVAILABLE

1

### 1 1/4"-14 TOOTH SPLINE

**TORQUE LIMIT 650 FT.-LBS.**

**SPLINE DATE**

| | |
|---|---|
| DIAMETRAL PITCH | 12/24 |
| PRESSURE ANGLE | 30° |
| NO. OF TEETH | 14 |
| MINOR DIA. | 1.062-1.050 |

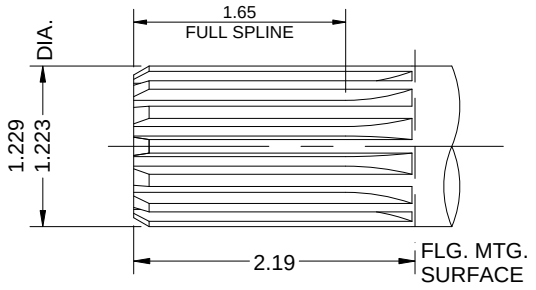


2

5

### 1 1/4" STRAIGHT

**TORQUE LIMIT 650 FT.-LBS.**

**E55, E66, E77 & E95 ONLY**

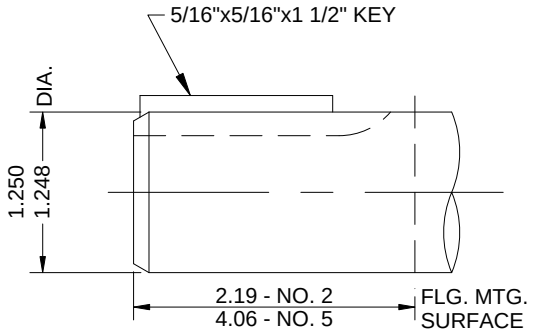


## STANDARD SAE 4-BOLT CONNECTOR PORTS

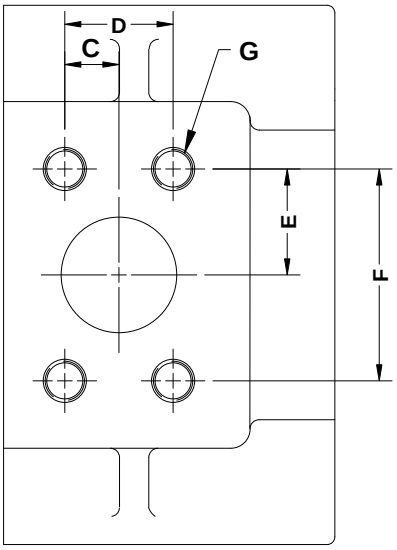


**SAE 4-BOLT CONN. PORTS**

| SIZE | INLET SIZE | OUTLET SIZE |
|---|---|---|
| ME30 | 2" | 2" |
| ME35 | 2" | 2" |
| ME40 | 2" | 2" |
| ME45 | 2" | 2" |
| ME50 | 2" | 2" |
| ME55 | 2" | 2" |
| ME66 | 2" | 2" |
| ME77 | 2" | 2" |

**4-BOLT CONNECTOR CHART**

| SIZE | C | D | E | F | G |
|---|---|---|---|---|---|
| 2" | .84 | 1.688 | 1.53 | 3.062 | 1/2-13NC |
| | | | | | |
| | | | | | |
| | | | | | |
| | | | | | |

UNLESS OTHERWISE SPECIFIED, ALL LINEAR DIMENSIONS ARE IN INCHES.

## FLANGES AVAILABLE

**C**

### SAE 2X4 BOLT 'C' FLANGE

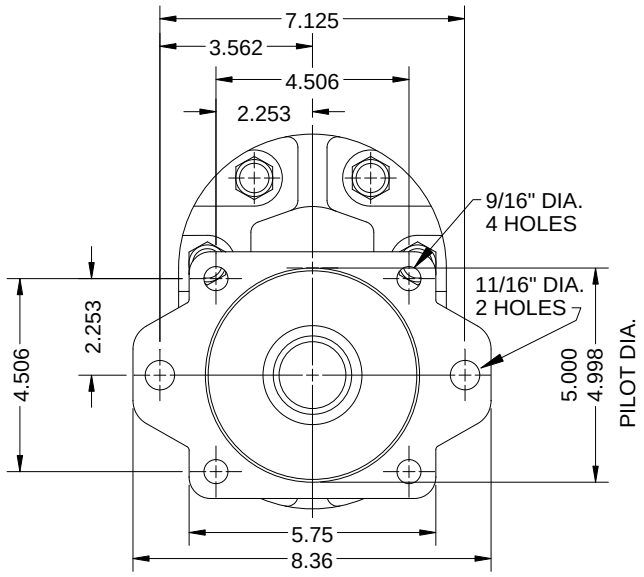


## DIMENSIONAL DATA

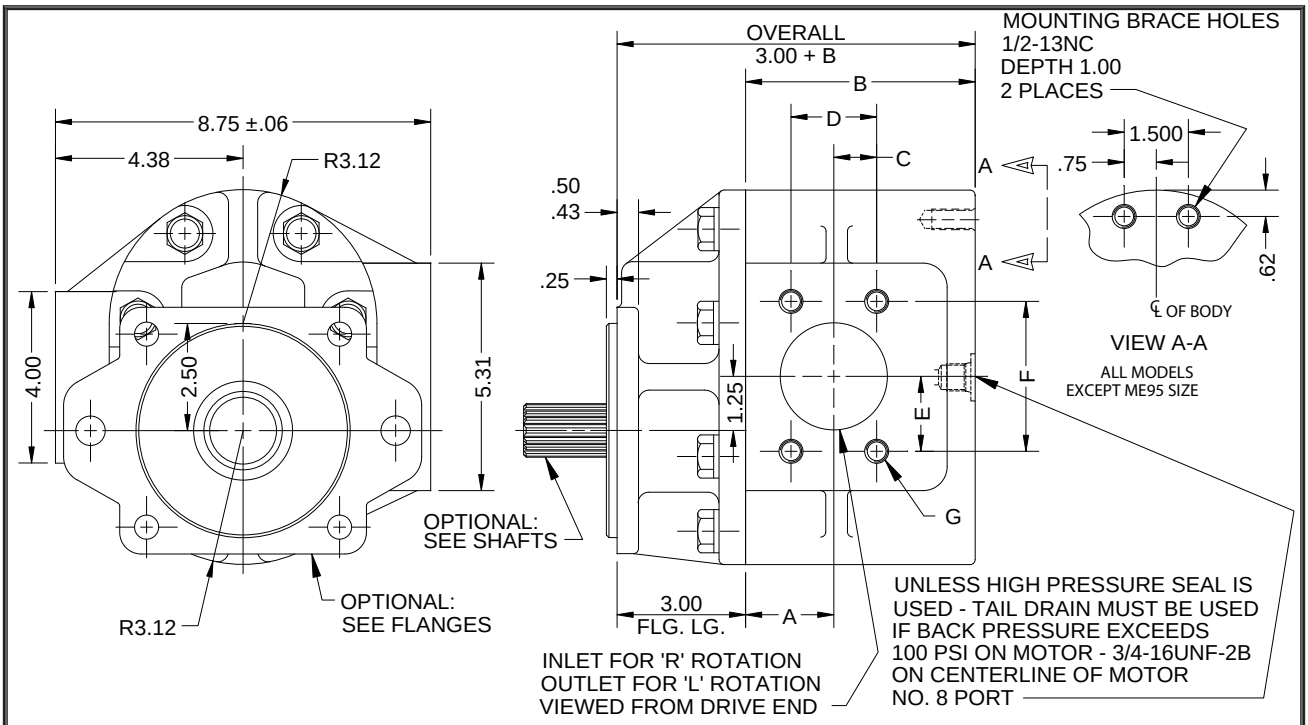


FOR METRIC DIMENSIONS
MULTIPLY 25.4 X IN. = mm

**MOUNTING DIMENSIONS**

| SIZE | A | B |
|---|---|---|
| ME30 | 1.75 | 4.92 |
| ME35 | 1.92 | 5.10 |
| ME40 | 2.09 | 5.27 |
| ME45 | 2.28 | 5.46 |
| ME50 | 2.45 | 5.63 |
| ME55 | 2.63 | 5.81 |
| ME66 | 3.05 | 6.23 |
| ME77 | 3.42 | 6.60 |
| ME95 | 3.00 | 7.27 |

## MODEL EXAMPLE

**ME ✳ 30 - 1 C**

SERIES

OPTIONAL: SPECIFY
CODE 'H' THIS AREA FOR
HIGH PRESSURE SEAL
OTHERWISE: LEAVE BLANK

SIZE

SHAFT

FLANGE

✳ THE OPTIONAL HIGH PRESSURE SEAL MAY BE USED WHEN DRAIN LINES ARE NOT PRACTICAL.
FOR SYSTEMS TOLERATING A DRAIN LINE, ELIMINATE THE 'H' FROM THE MODEL CODE.



UNLESS OTHERWISE SPECIFIED, ALL LINEAR DIMENSIONS ARE IN INCHES.

## GEARTEK ME30 MOTOR PERFORMANCE

SAE 10W oil @ 150 degrees F

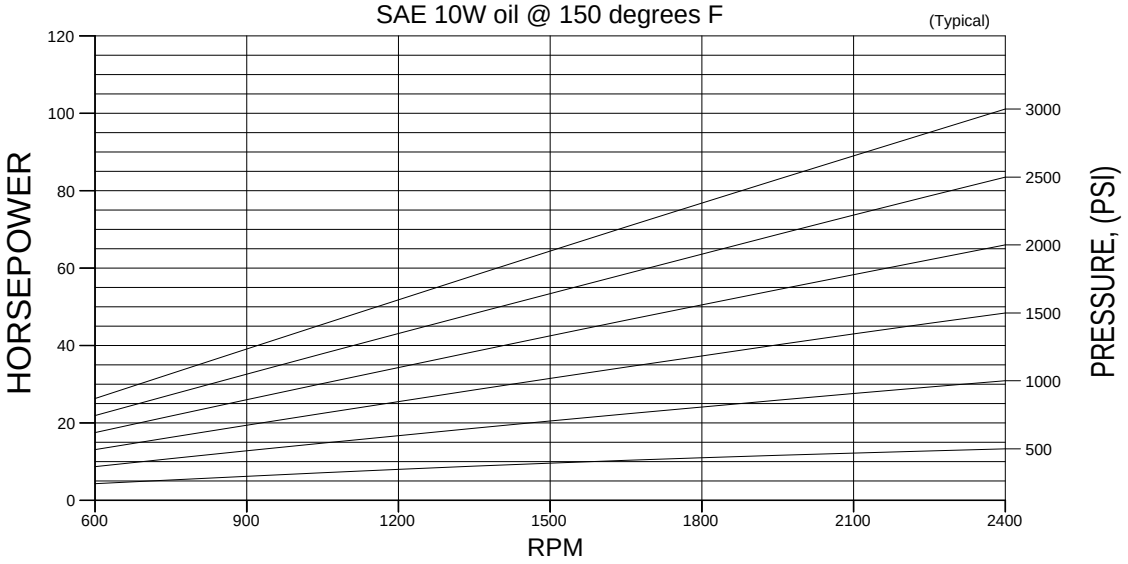


## GEARTEK ME35 MOTOR PERFORMANCE

SAE 10W oil @ 150 degrees F

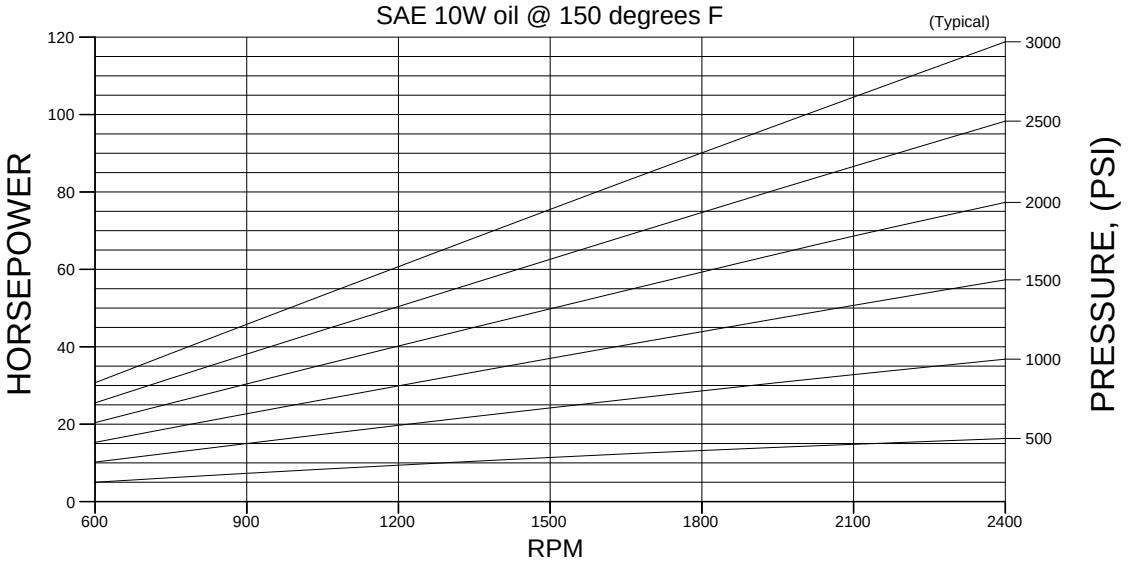


## GEARTEK ME40 MOTOR PERFORMANCE

SAE 10W oil @ 150 degrees F

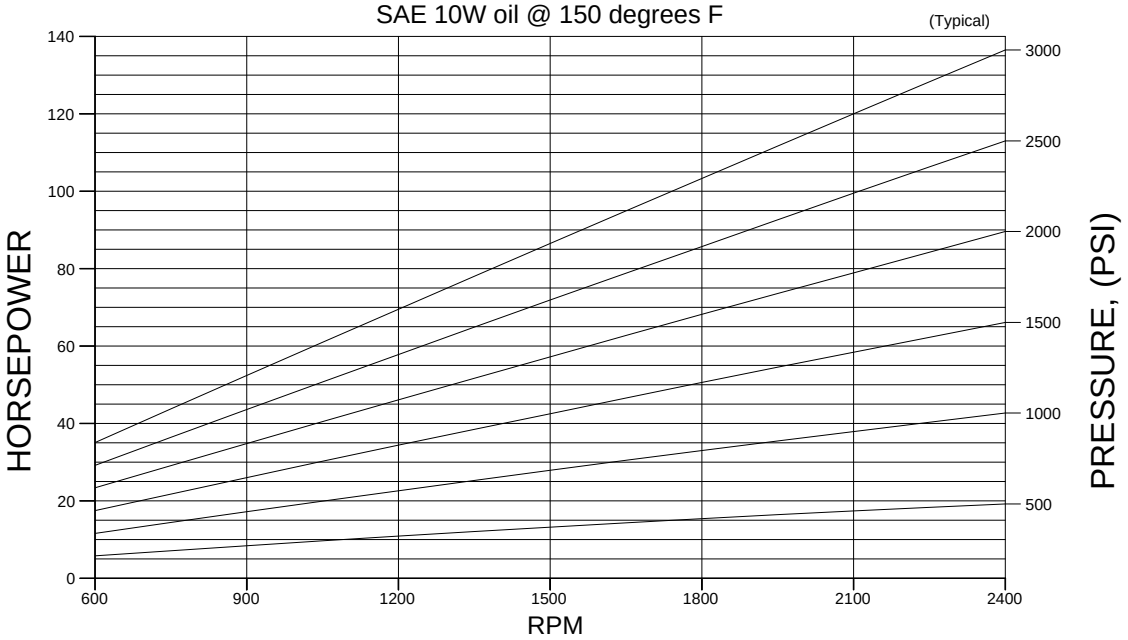

## GEARTEK ME45 MOTOR PERFORMANCE

SAE 10W oil @ 150 degrees F

(Typical)

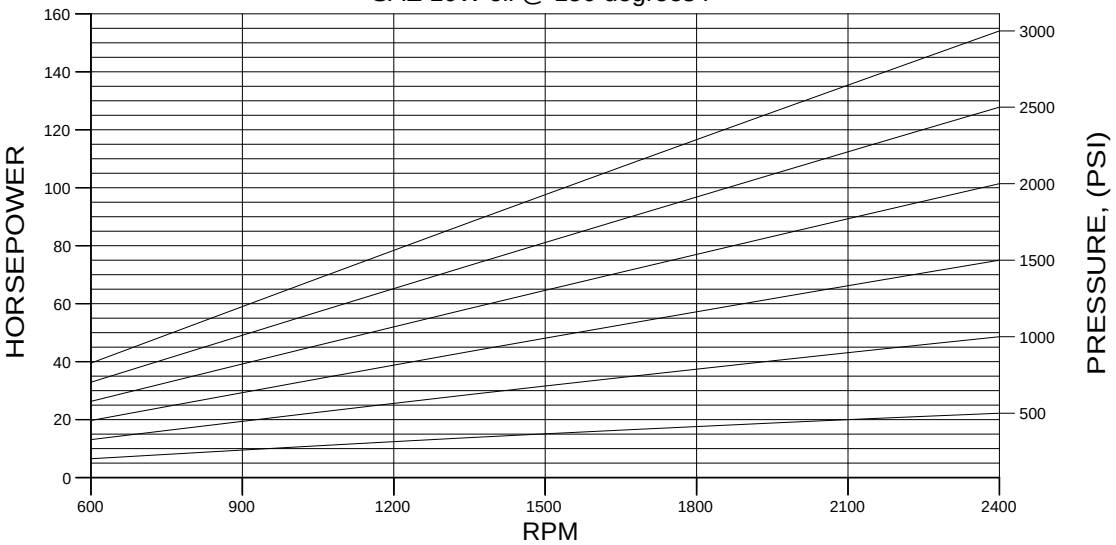


## GEARTEK ME50 MOTOR PERFORMANCE

SAE 10W oil @ 150 degrees F

(Typical)

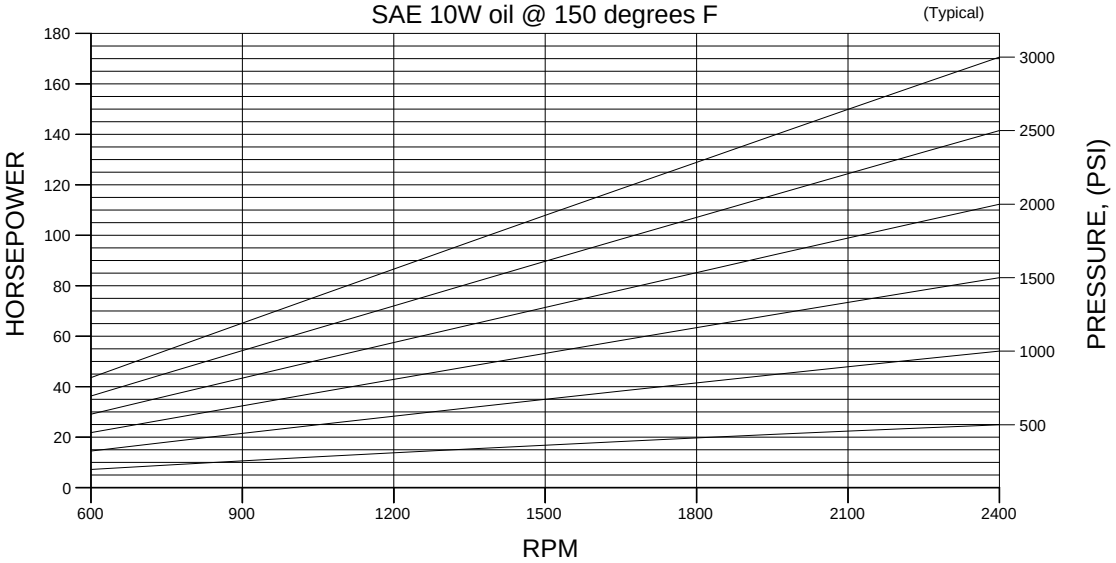


## GEARTEK ME55 MOTOR PERFORMANCE

SAE 10W oil @ 150 degrees F

(Typical)

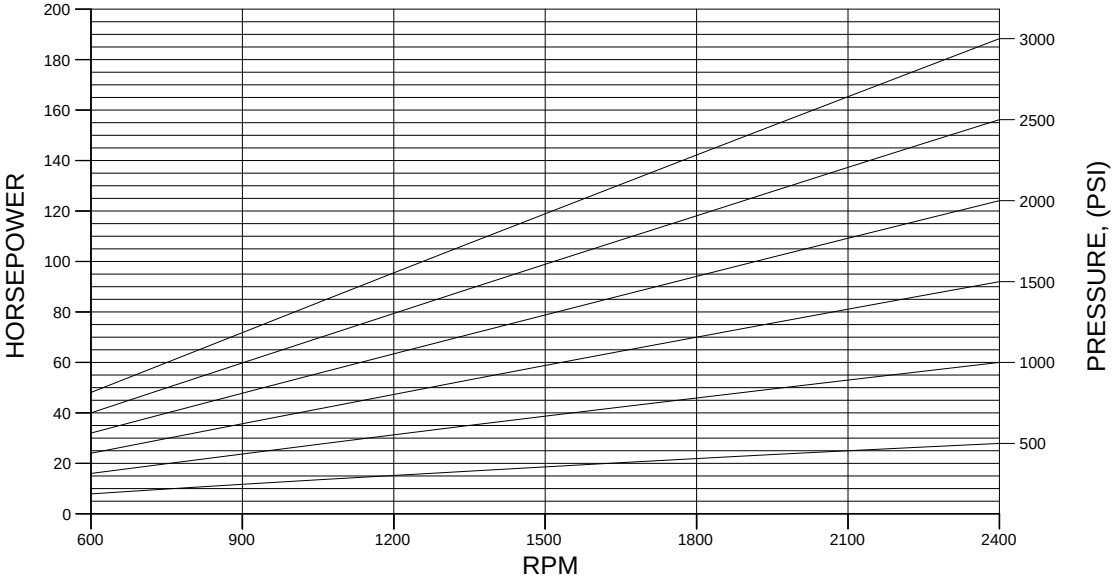

## GEARTEK ME66 MOTOR PERFORMANCE

SAE 10W oil @ 150 degrees F

(Typical)

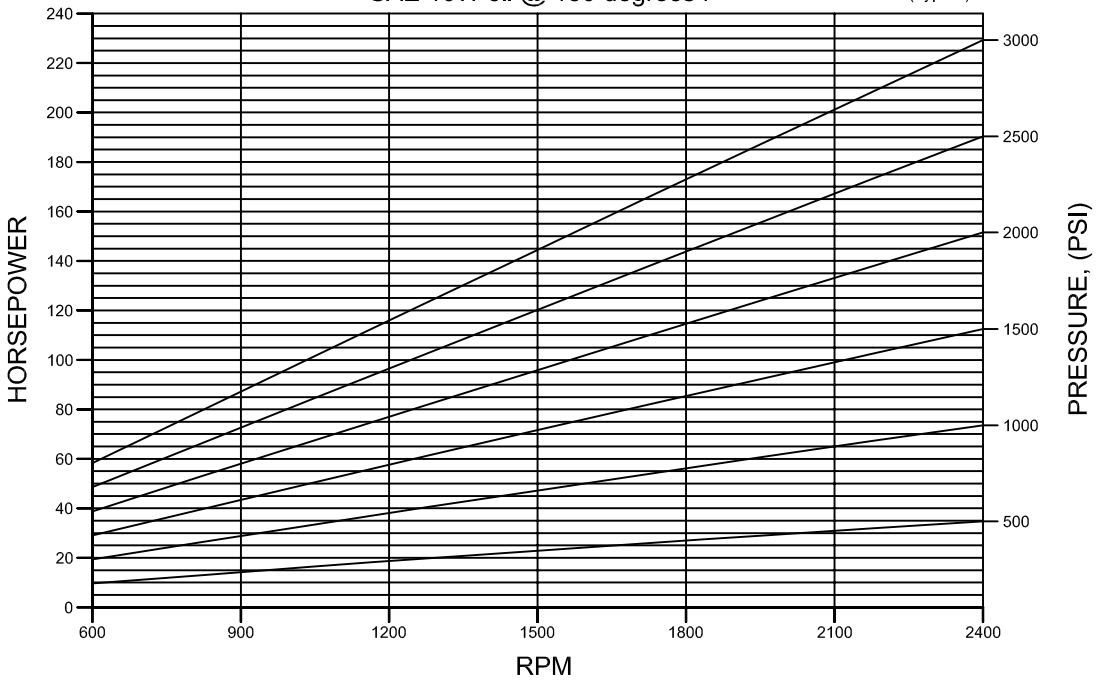


## GEARTEK ME77 MOTOR PERFORMANCE

SAE 10W oil @ 150 degrees F

(Typical)

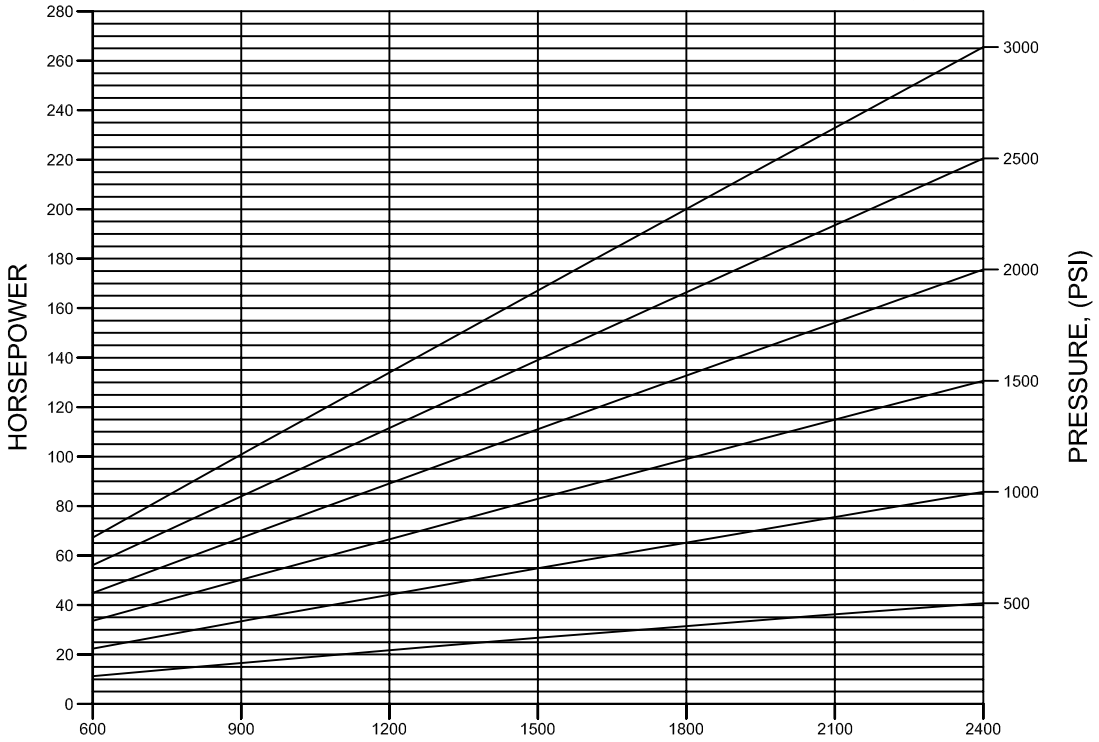


GEARTEK® FLUID POWER PUMPS AND MOTORS

**DIVISION OF HYDRAULIC ANALYSIS, INC.**